SGS-THOMSON MICROELECTRONICS

GS-R400 Family

20W TO 140W STEP-DOWN SWITCHING REGULATOR FAMILY

FEATURES

- MTBF in excess of 200,000 hours
- 4A max output current
- 46V max input voltage
- 4V max drop-out voltage
- Soft start
- Remote logic inhibit/enable
- Remote output voltage sense
- Non-latching overload and short circuit protection
- Crow-bar output overvoltage protection



DESCRIPTION

The GS-R400 series is a versatile family of high current, high voltage step-down switching voltage regulators.

The integral heatsink allows a large power handling capability and it provides also an effective shielding to minimize EMI.

SELECTION CHART

Type Ordering Number	Output Voltage (V)	Input Voltage (V)	Output Ripple (mVpp)	Regulation		Efficiency (%)	Notes
				Line (mV/V)	Load (mV/A)		
GS-R405	5.1 ± 2%	9 to 46	25	2	20	70	Fixed output voltage
GS-R412	12.0 ± 4%	16 to 46	50	5	40	80	"
GS-R415	15.0 ± 4%	19 to 46	65	5	60	85	"
GS-R424	24.0 ± 4%	28 to 46	100	6	90	90	"
GS-R405S	5.1 ± 2%	9 to 46	25	2	20	70	Reset output
GS-R400V	5.1 to 40	Vo+4 to 46	25 to 100	6	20 to 90	70 to 90	Progr. output voltage
GS-R400VB	5.1 to 40	Vo+4 to 46	25 to 100	6	20 to 90	70 to 90	Progr. output voltage and current. Frequency synchr.

Note: The line regulation is measured at I_{out}=1A
The load regulation is measured at V_{in}=V_O+8V and I_{out}=1 to 3A
For $V_O \geq 36V$ and I_O = 4A an external heatsink or forced ventilation are required.

ABSOLUTE MAXIMUM RATINGS

Symbol	Parameter	Value	Unit
V_i	DC Input Voltage	48	V
I_{rt}*	Reset Output Sink Current	20	mA
T_{stg}	Storage Temperature Range	– 40 to +105	°C
T_{cop}	Operating Case Temperature Range	– 20 to +85	°C

* GS-R405S only

CONNECTION DIAGRAM AND MECHANICAL DATA

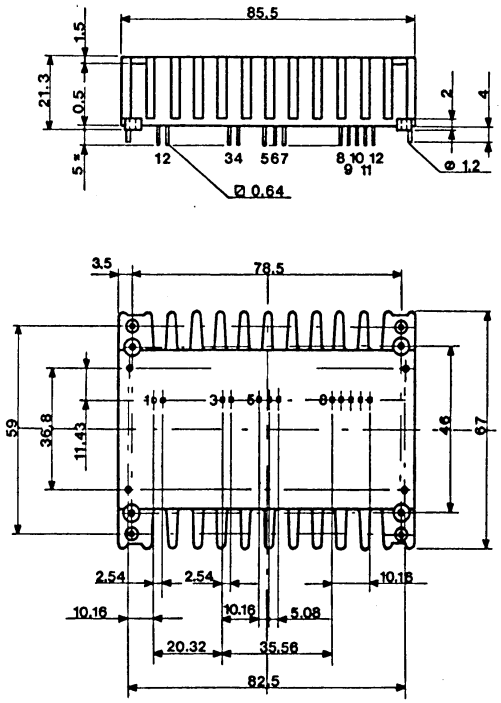

Pin 2 GS-R405S only
Pin 5,6,7 GS-R400VB only
Pin 12 GS-R400V/VB only

Dimensions in mm

Bottom view

PIN DESCRIPTION

Pin	Function	Description
1	Inhibit	The module is disabled by a high logic level applied to this pin.
2	Reset	Reset output (GS-R405S only).
3	+ Input	DC input voltage. Recommended maximum voltage is 46V.
4	Input GND	Return for input voltage source.
5	Oscillator	100kHz oscillator output. To be connected to Sync (pin 6) input if the unit is a master and left open if it is a slave (GS-R400VB only). See fig. 5.
6	Sync	Synchronization input. To be connected to the Oscillator output (pin 5) of the master (GS-R400VB only). See fig. 5.
7	Current limiting	A resistor ($\geq 2.2k\Omega$) connected from this pin to pin 9 sets the current limiting level (GS-R400VB only).
8	Output GND	Return for output current path. Internally connected to pin 4.
9	– Sense	Senses the remote load return. Must be tied to pin 8 when the remote sensing feature is not used. See fig. 1.
10	+ Sense	Senses the remote load high side. Must be tied to pin 11 when the remote load sensing feature is not used. See fig. 1.
11	+ Output	Regulated DC output voltage.
12	Program	A resistor ($\leq 18k\Omega$) connected between this pin and pin 10 sets the output voltage (GS-R400V and GS-R400VB only).

ELECTRICAL CHARACTERISTICS (T_A = 25°C unless otherwise specified)

Symbol	Parameter	Test Conditions	Min	Typ	Max	Unit
$\Delta V_O/\Delta T$	Temperature Stability	$V_i = V_O+8V$ $I_O = 1A$		0.2/1.6		mv/°C
I_O	Output Current	$V_i = V_O+8V$	0.2		4	A
I_{OL}	Current Limit	$V_i = V_O+8V$		5	8	A
I_{isc}	Average Input Current	V_i = 46V Output Shorted		0.1	0.2	A
f_S	Switching Frequency	I_O = 1A		100		KHz
SVR	Supply Voltage Rejection	f_O = 100Hz Io =1A		4/12		mV/V
V_r	Ripple Voltage	I_O = 2A		25/150		mV_{pp}
t_{ss}	Soft Start Time	$V_i = V_O+8V$		10/35		ms
V_{inhl}	Low Inhibit Voltage				0.8	V
V_{inhh}	High Inhibit Voltage		2		5.5	V
I_{inhh}	High Inhibit Input Current	V_{inh} = 5V			500	µA
t_{cb}	Crow-bar Delay Time			5		µs
V_{rh}*	Reset High Level			5		V
V_{rl}*	Reset Low Level	I_{rl} = 5mA I_{rl} = 10mA			0.2 0.4	V
t_{rd}*	Reset Delay Time			100		ms
V_{cth}	Crowbar Intervention Threshold			V_O•1.25		V
ΔV_O	Total Remote Sense Compensation				500	mV
R_{th}	Thermal Resistance	Case to ambient		5		°C/W

* GS-R405S only

USER NOTES

Input Voltage

The recommended operating maximum DC input voltage is 46V inclusive of the ripple voltage.

Remote Sensing

The remote voltage sense compensation range is for a total drop of 500mV equally shared between the load connecting wires. It is a good practice to shield the sensing wires to avoid oscillation.
Each sense input must be connected to its companion output power pin when the remote sense capability is not used (see fig. 1).

Case Grounding

The module case is isolated from the electrical circuit of the switching regulator. It can be grounded using the 4 corner pins.
The PCB area below the module can be used as an effective sixth side shield against EMI.

Thermal Characteristics

The case-to-ambient thermal resistance of all the GS-R400 modules is about 5°C/W. This produces a 50°C temperature increase of the module surface for 10W of internal power dissipation.
Depending on the ambient temperature and/or on the power dissipation, an additional heatsink or forced ventilation may be required.

Input Impedance

The module has an internal capacitor connected between the input pins in order to assure PWM stability. This capacitor cannot handle large values of high frequency ripple current and it can be permanently damaged if the primary energy source impedance is not adequate. The use of an external low ESR, high ripple current capacitor located as close the module as possible is recommended.
Suitable capacitors should have a RMS current capability of $2.5A_{RMS}$ with a working voltage of 50 V_{DC} and an ESR of 0,1Ω at 100 kHz. When space

is a limitation, a 22µF ceramic multilayer capacitor must be connected to the module input pins.

Output Voltage Programming

The GS-R400V and GS-R400VB output voltage is programmed by using a resistor (see pin function table and fig. 4). The resistor must be located very close the module and the PCB layout must mimimize injected noise. The value of the resistor is calculated by using the following formula:

$$R_V = 2.67 \left(\frac{V_O}{5.1} - 1 \right) k\Omega$$

V_O can be adjusted between 5.1 and 40V.

Current Limiting Programming

The GS-R400VB current limiting is programmed by using a resistor (see pin function table and fig. 4). The value of the resistor is calculated by using the following formula:

$$R_I = [2.2 + (5 \bullet I_O)]\ k\Omega$$

Module Protection

The modules are protected against occasional and permanent short circuits of the output pin to ground, as well as against output current overload.
When the output current exceeds the maximum value, the output is automatically disabled. After a fixed time the module starts again in a soft mode. The cycle is repeated until the overload condition is removed.
A crowbar output overvoltage protection is activated whenever the output voltage exceeds the nominal output voltage by more than 25%.

Figure 1. Load Connection

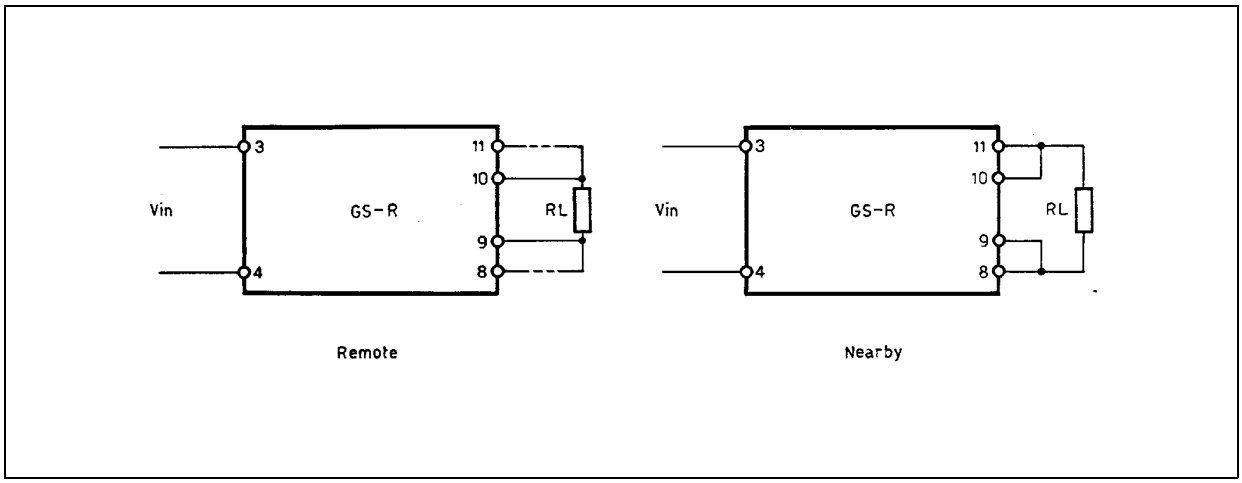

Figure 2. Remote Inhibit Operation

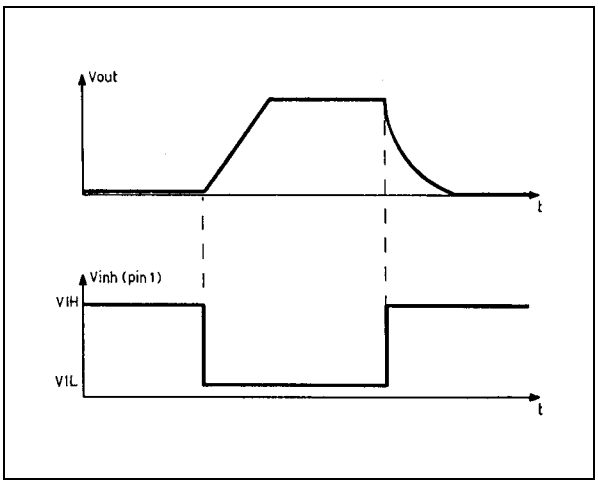

Figure 3. Reset Operation

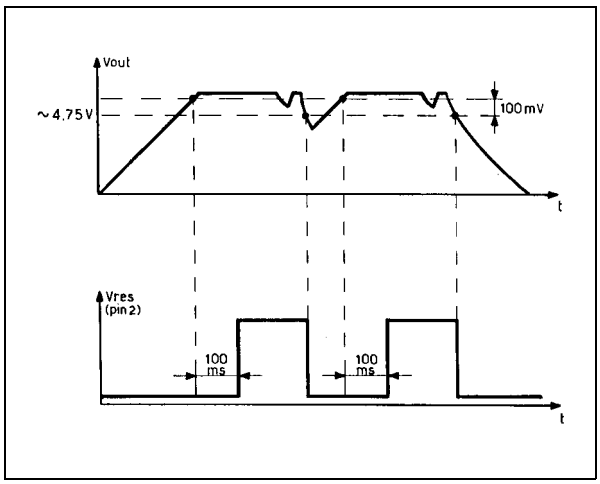

Figure 4. Voltage and Current Programming

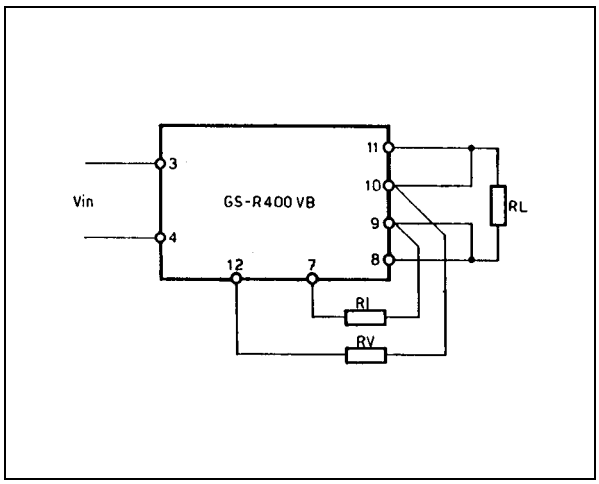

Figure 5. Multiple Units Synchronization

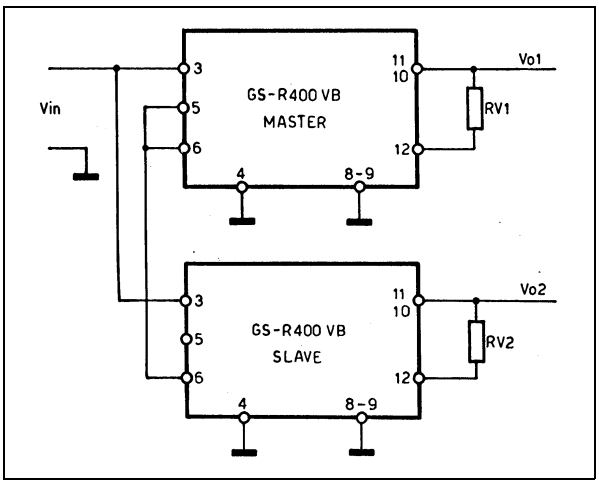

Information furnished is believed to be accurate and reliable. However, SGS-THOMSON Microelectronics assumes no responsibility for the consequences of use of such information nor for any infringement of patents or other rights of third parties which may result from its use. No license is granted by implication or otherwise under any patent or patent rights of SGS-THOMSON Microelectronics. Specification mentioned in this publication are subject to change without notice. This publication supersedes and replaces all information previously supplied. SGS-THOMSON Microelectronics products are not authorized for use as critical components in life support devices or systems without express written approval of SGS-THOMSON Microelectronics.

© 1994 SGS-THOMSON Microelectronics – All Rights Reserved

SGS-THOMSON Microelectronics GROUP OF COMPANIES
Australia - Brazil - China - France - Germany - Hong Kong - Italy - Japan - Korea - Malaysia - Malta - Morocco - The Netherlands - Singapore - Spain - Sweden - Switzerland - Taiwan - Thailand - United Kingdom - U.S.A.

This datasheet has been download from:

www.datasheetcatalog.com

Datasheets for electronics components.