Features

- Fast Read Access Time – 70 ns
- 5-volt Only Reprogramming
- Sector Program Operation
  - Single Cycle Reprogram (Erase and Program)
  - 512 Sectors (128 Bytes/Sector)
  - Internal Address and Data Latches for 128 Bytes
- Internal Program Control and Timer
- Hardware and Software Data Protection
- Fast Sector Program Cycle Time – 10 ms
- $\overline{\text{DATA}}$ Polling for End of Program Detection
- Low Power Dissipation
  - 50 mA Active Current
  - 100 µA CMOS Standby Current
- Typical Endurance > 10,000 Cycles
- Single 5V ± 10% Supply
- CMOS and TTL Compatible Inputs and Outputs
- Commercial and Industrial Temperature Ranges

512K (64K x 8) 5-volt Only Flash Memory

AT29C512

Description

The AT29C512 is a 5-volt only in-system Flash programmable and erasable read only memory (PEROM). Its 512K of memory is organized as 65,536 words by 8 bits. Manufactured with Atmel's advanced nonvolatile CMOS technology, the device offers access times to 70 ns with power dissipation of just 275 mW over the commercial temperature range. When the device is deselected, the CMOS standby current is less than 100 µA. The device endurance is such that any sector can typically be written to in excess of 10,000 times.

Pin Configurations

Pin Name	Function
A0 - A15	Addresses
$\overline{\text{CE}}$	Chip Enable
$\overline{\text{OE}}$	Output Enable
$\overline{\text{WE}}$	Write Enable
I/O0 - I/O7	Data Inputs/Outputs
NC	No Connect

TSOP Top View
Type 1

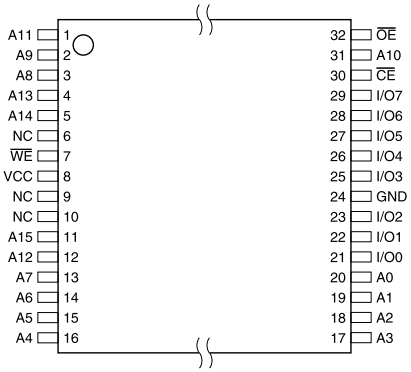

DIP Top View

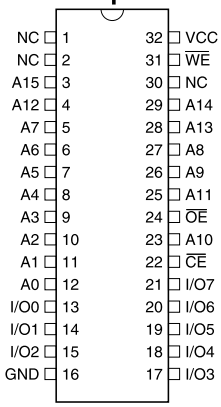

PLCC Top View

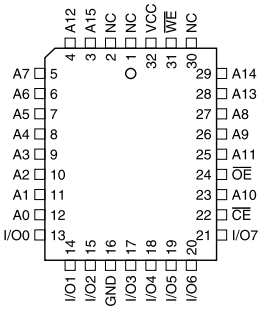

Rev. 0456F–FLASH–12/02

To allow for simple in-system reprogrammability, the AT29C512 does not require high input voltages for programming. Five-volt-only commands determine the operation of the device. Reading data out of the device is similar to reading from an EPROM. Reprogramming the AT29C512 is performed on a sector basis; 128 bytes of data are loaded into the device and then simultaneously programmed.

During a reprogram cycle, the address locations and 128 bytes of data are internally latched, freeing the address and data bus for other operations. Following the initiation of a program cycle, the device will automatically erase the sector and then program the latched data using an internal control timer. The end of a program cycle can be detected by $\overline{\text{DATA}}$ polling of I/O7. Once the end of a program cycle has been detected, a new access for a read or program can begin.

Block Diagram

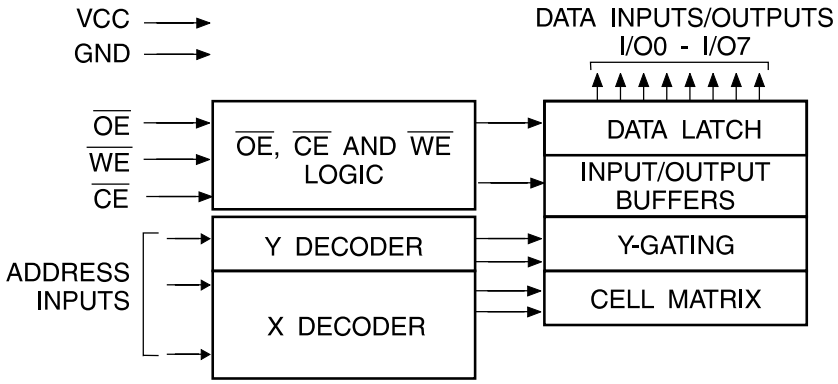

Device Operation

READ: The AT29C512 is accessed like an EPROM. When $\overline{\text{CE}}$ and $\overline{\text{OE}}$ are low and $\overline{\text{WE}}$ is high, the data stored at the memory location determined by the address pins is asserted on the outputs. The outputs are put in the high impedance state whenever $\overline{\text{CE}}$ or $\overline{\text{OE}}$ is high. This dual-line control gives designers flexibility in preventing bus contention.

BYTE LOAD: Byte loads are used to enter the 128 bytes of a sector to be programmed or the software codes for data protection. A byte load is performed by applying a low pulse on the $\overline{\text{WE}}$ or $\overline{\text{CE}}$ input with $\overline{\text{CE}}$ or $\overline{\text{WE}}$ low (respectively) and $\overline{\text{OE}}$ high. The address is latched on the falling edge of $\overline{\text{CE}}$ or $\overline{\text{WE}}$, whichever occurs last. The data is latched by the first rising edge of $\overline{\text{CE}}$ or $\overline{\text{WE}}$.

PROGRAM: The device is reprogrammed on a sector basis. If a byte of data within a sector is to be changed, data for the entire sector must be loaded into the device. Any byte that is not loaded during the programming of its sector will be indeterminate. Once the bytes of a sector are loaded into the device, they are simultaneously programmed during the internal programming period. After the first data byte has been loaded into the device, successive bytes are entered in the same manner. Each new byte to be programmed must have its high-to-low transition on $\overline{\text{WE}}$ (or $\overline{\text{CE}}$) within 150 µs of the low-to-high transition of $\overline{\text{WE}}$ (or $\overline{\text{CE}}$) of the preceding byte. If a high-to-low transition is not detected within 150 µs of the last low-to-high transition, the load period will end and the internal programming period will start. A7 to A15 specify the sector address. The sector address must be valid during each high-to-low transition of $\overline{\text{WE}}$ (or $\overline{\text{CE}}$). A0 to A6 specify the byte address within the sector. The bytes may be loaded in any order; sequential loading is not required. Once a programming operation has been initiated, and for the duration of t_{WC}, a read operation will effectively be a polling operation.

SOFTWARE DATA PROTECTION: A software controlled data protection feature is available on the AT29C512. Once the software protection is enabled a software algorithm must be issued to the device before a program may be performed. The software protection feature may be enabled or disabled by the user; when shipped from Atmel, the software data protection feature is disabled. To enable the software data protection, a series of three program commands to specific addresses with specific data must be performed. After the software data protection is enabled the same three program commands must begin each program cycle in order for the programs to occur. All software program commands must obey the sector program timing specifications. Once set, the software data protection feature remains active unless its disable command is issued. Power transitions will not reset the software data protection feature; however, the software feature will guard against inadvertent program cycles during power transitions.

Once set, software data protection will remain active unless the disable command sequence is issued.

After setting SDP, any attempt to write to the device without the 3-byte command sequence will start the internal write timers. No data will be written to the device; however, for the duration of t_{WC}, a read operation will effectively be a polling operation.

After the software data protection's 3-byte command code is given, a byte load is performed by applying a low pulse on the $\overline{WE}$ or $\overline{CE}$ input with $\overline{CE}$ or $\overline{WE}$ low (respectively) and $\overline{OE}$ high. The address is latched on the falling edge of $\overline{CE}$ or $\overline{WE}$, whichever occurs last. The data is latched by the first rising edge of $\overline{CE}$ or $\overline{WE}$. The 128 bytes of data must be loaded into each sector by the same procedure as outlined in the program section under device operation.

HARDWARE DATA PROTECTION: Hardware features protect against inadvertent programs to the AT29C512 in the following ways: (a) V_{CC} sense – if V_{CC} is below 3.8V (typical), the program function is inhibited; (b) V_{CC} power on delay – once V_{CC} has reached the V_{CC} sense level, the device will automatically time out 5 ms (typical) before programming; (c) Program inhibit – holding any one of $\overline{OE}$ low, $\overline{CE}$ high or $\overline{WE}$ high inhibits program cycles; and (d) Noise filter – pulses of less than 15 ns (typical) on the $\overline{WE}$ or $\overline{CE}$ inputs will not initiate a program cycle.

PRODUCT IDENTIFICATION: The product identification mode identifies the device and manufacturer as Atmel. It may be accessed by hardware or software operation. The hardware operation mode can be used by an external programmer to identify the correct programming algorithm for the Atmel product. In addition, users may wish to use the software product identification mode to identify the part (i.e., using the device code), and have the system software use the appropriate sector size for program operations. In this manner, the user can have a common board design for 256K to 4-megabit densities and, with each density's sector size in a memory map, have the system software apply the appropriate sector size.

For details, see Operating Modes (for hardware operation) or Software Product Identification. The manufacturer and device code is the same for both modes.

$\overline{\text{DATA}}$ POLLING: The AT29C512 features $\overline{\text{DATA}}$ polling to indicate the end of a program cycle. During a program cycle an attempted read of the last byte loaded will result in the complement of the loaded data on I/O7. Once the program cycle has been completed, true data is valid on all outputs and the next cycle may begin. $\overline{\text{DATA}}$ polling may begin at any time during the program cycle.

TOGGLE BIT: In addition to $\overline{\text{DATA}}$ polling the AT29C512 provides another method for determining the end of a program or erase cycle. During a program or erase operation, successive attempts to read data from the device will result in I/O6 toggling between one and zero. Once the program cycle has completed, I/O6 will stop toggling and valid data will be read. Examining the toggle bit may begin at any time during a program cycle.

OPTIONAL CHIP ERASE MODE: The entire device can be erased by using a 6-byte software code. Please see Software Chip Erase application note for details.

Absolute Maximum Ratings*

Temperature Under Bias	-55°C to +125°C
Storage Temperature	-65°C to +150°C
All Input Voltages (including NC Pins) with Respect to Ground	-0.6V to +6.25V
All Output Voltages with Respect to Ground	-0.6V to V_{CC} + 0.6V
Voltage on $\overline{\text{OE}}$ with Respect to Ground	-0.6V to +13.5V

*NOTICE: Stresses beyond those listed under “Absolute Maximum Ratings” may cause permanent damage to the device. This is a stress rating only and functional operation of the device at these or any other conditions beyond those indicated in the operational sections of this specification is not implied. Exposure to absolute maximum rating conditions for extended periods may affect device reliability.

DC and AC Operating Range

		AT29C512-70	AT29C512-90	AT29C512-12	AT29C512-15
Operating Temperature (Case)	Com.	0°C - 70°C	0°C - 70°C	0°C - 70°C	0°C - 70°C
	Ind.	-40°C - 85°C	-40°C - 85°C	-40°C - 85°C	-40°C - 85°C
V_{CC} Power Supply		5V ± 5%	5V ± 10%	5V ± 10%	5V ± 10%

Note: Not recommended for New Designs.

Operating Modes

Mode	$\overline{CE}$	$\overline{OE}$	$\overline{WE}$	Ai	I/O
Read	V_{IL}	V_{IL}	V_{IH}	Ai	D_{OUT}
Program(2)	V_{IL}	V_{IH}	V_{IL}	Ai	D_{IN}
5V Chip Erase	V_{IL}	V_{IH}	V_{IL}	Ai	
Standby/Write Inhibit	V_{IH}	X(1)	X	X	High Z
Program Inhibit	X	X	V_{IH}		
Program Inhibit	X	V_{IL}	X		
Output Disable	X	V_{IH}	X		High Z
Product Identification					
Hardware	V_{IL}	V_{IL}	V_{IH}	A1 - A15 = V_{IL}, A9 = V_H,(3) A0 = V_{IL}	Manufacturer Code(4)
				A1-A15 = V_{IL}, A9 = V_H,(3) A0 = V_{IH}	Device Code(4)
Software(5)				A0 = V_{IL}	Manufacturer Code(4)
				A0 = V_{IH}	Device Code(4)

Notes:
1. X can be V_{IL} or V_{IH}.
2. Refer to AC Programming Waveforms.
3. V_H = 12.0V ± 0.5V.
4. Manufacturer Code: 1F, Device Code: 5D.
5. See details under Software Product Identification Entry/Exit.

DC Characteristics

Symbol	Parameter	Condition		Min	Max	Units
I_{LI}	Input Load Current	V_{IN} = 0V to V_{CC}			10	µA
I_{LO}	Output Leakage Current	$V_{I/O}$ = 0V to V_{CC}			10	µA
I_{SB1}	V_{CC} Standby Current CMOS	$\overline{CE}$ = V_{CC} - 0.3V to V_{CC}	Com.		100	µA
			Ind.		300	µA
I_{SB2}	V_{CC} Standby Current TTL	$\overline{CE}$ = 2.0V to V_{CC}			3	mA
I_{CC}	V_{CC} Active Current	f = 5 MHz; I_{OUT} = 0 mA			50	mA
V_{IL}	Input Low Voltage				0.8	V
V_{IH}	Input High Voltage			2.0		V
V_{OL}	Output Low Voltage	I_{OL} = 2.1 mA			0.45	V
V_{OH1}	Output High Voltage	I_{OH} = -400 µA		2.4		V
V_{OH2}	Output High Voltage CMOS	I_{OH} = -100 µA; V_{CC} = 4.5V		4.2		V

AC Read Characteristics

Symbol	Parameter	AT29C512-70		AT29C512-90		AT29C512-12		AT29C512-15		Units
		Min	Max	Min	Max	Min	Max	Min	Max	
t_{ACC}	Address to Output Delay		70		90		120		150	ns
t_{CE}[1]	$\overline{CE}$ to Output Delay		70		90		120		150	ns
t_{OE}[2]	$\overline{OE}$ to Output Delay	0	35	0	40	0	50	0	70	ns
t_{DF}[3][4]	$\overline{CE}$ or $\overline{OE}$ to Output Float	0	10	0	25	0	30	0	40	ns
t_{OH}	Output Hold from $\overline{OE}$, $\overline{CE}$ or Address, whichever occurred first	0		0		0		0		ns

Note: Not recommended for New Designs.

AC Read Waveforms[1][2][3][4]

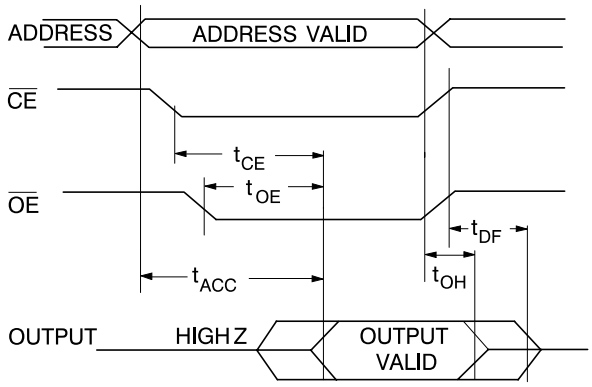

Notes:
1. $\overline{CE}$ may be delayed up to $t_{ACC} - t_{CE}$ after the address transition without impact on t_{ACC}.
2. $\overline{OE}$ may be delayed up to $t_{CE} - t_{OE}$ after the falling edge of $\overline{CE}$ without impact on t_{CE} or by $t_{ACC} - t_{OE}$ after an address change without impact on t_{ACC}.
3. t_{DF} is specified from $\overline{OE}$ or $\overline{CE}$ whichever occurs first (CL = 5 pF).
4. This parameter is characterized and is not 100% tested.

Input Test Waveforms and Measurement Level

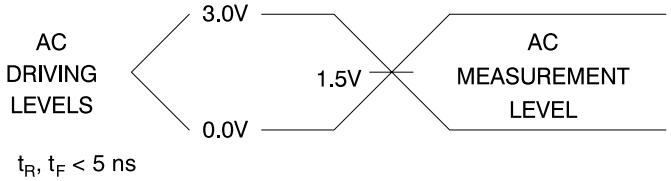

t_R, t_F < 5 ns

Output Test Load

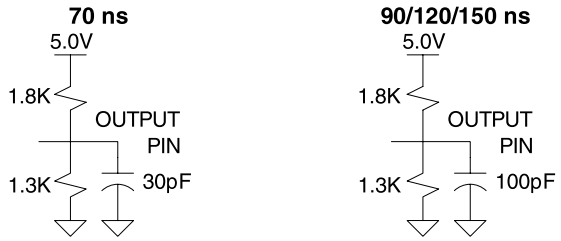

Pin Capacitance

f = 1 MHz, T = 25°C[1]

Symbol	Typ	Max	Units	Conditions
C_{IN}	4	6	pF	V_{IN} = 0V
C_{OUT}	8	12	pF	V_{OUT} = 0V

Note: 1. This parameter is characterized and is not 100% tested.

AC Byte Load Characteristics

Symbol	Parameter	Min	Max	Units
t_{AS}, t_{OES}	Address, $\overline{OE}$ Set-up Time	0		ns
t_{AH}	Address Hold Time	50		ns
t_{CS}	Chip Select Set-up Time	0		ns
t_{CH}	Chip Select Hold Time	0		ns
t_{WP}	Write Pulse Width ($\overline{WE}$ or $\overline{CE}$)	90		ns
t_{DS}	Data Set-up Time	35		ns
t_{DH}, t_{OEH}	Data, $\overline{OE}$ Hold Time	0		ns
t_{WPH}	Write Pulse Width High	100		ns

AC Byte Load Waveforms

$\overline{WE}$ Controlled

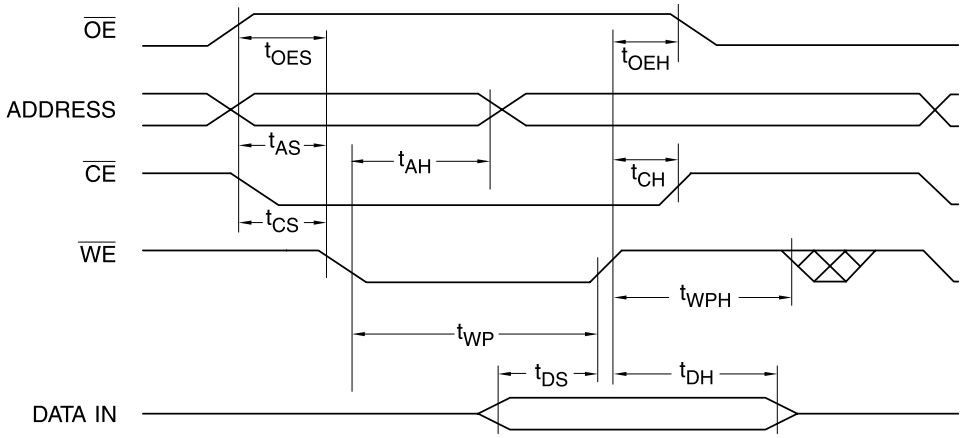

$\overline{CE}$ Controlled

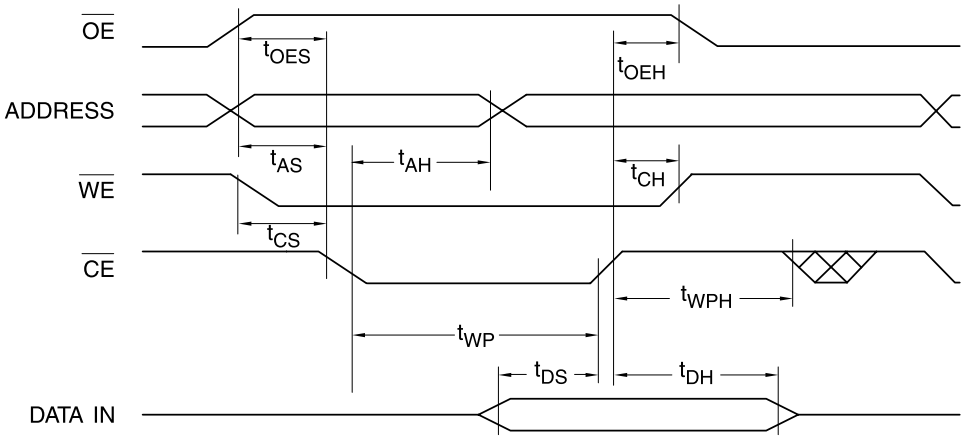

Program Cycle Characteristics

Symbol	Parameter	Min	Max	Units
t_{WC}	Write Cycle Time		10	ms
t_{AS}	Address Set-up Time	0		ns
t_{AH}	Address Hold Time	50		ns
t_{DS}	Data Set-up Time	35		ns
t_{DH}	Data Hold Time	0		ns
t_{WP}	Write Pulse Width	90		ns
t_{BLC}	Byte Load Cycle Time		150	µs
t_{WPH}	Write Pulse Width High	100		ns

Program Cycle Waveforms(1)(2)(3)

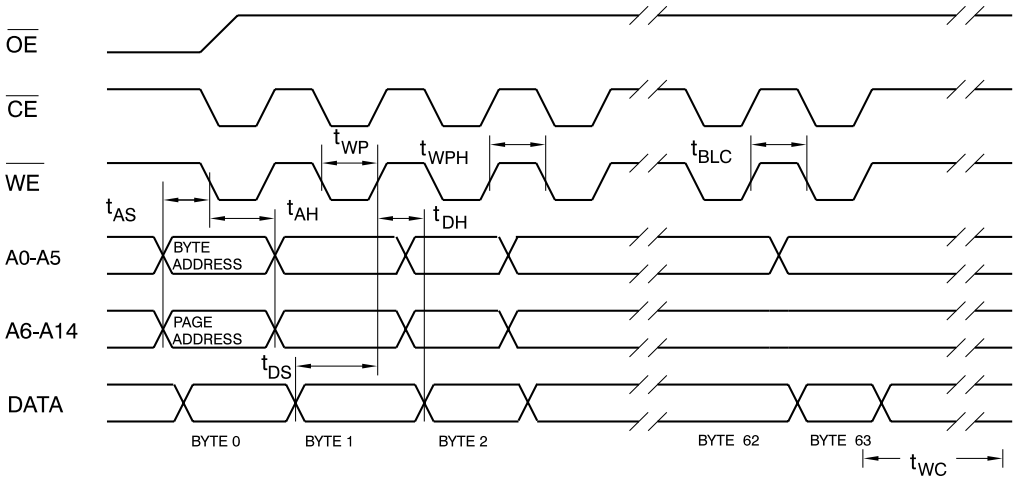

Notes: 1. A7 through A15 must specify the sector address during each high-to-low transition of $\overline{WE}$ (or $\overline{CE}$).
2. $\overline{OE}$ must be high when $\overline{WE}$ and $\overline{CE}$ are both low.
3. All bytes that are not loaded within the sector being programmed will be indeterminate.

Software Data Protection Enable Algorithm[1]

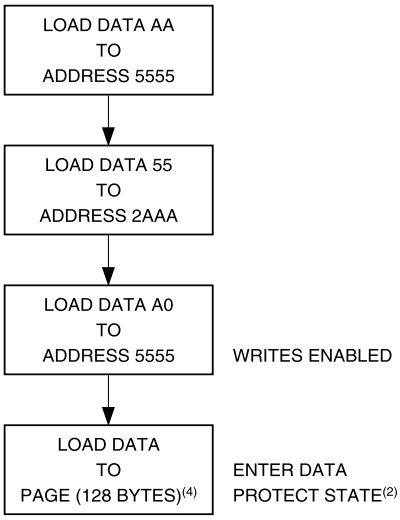

Software Data Protection Disable Algorithm[1]

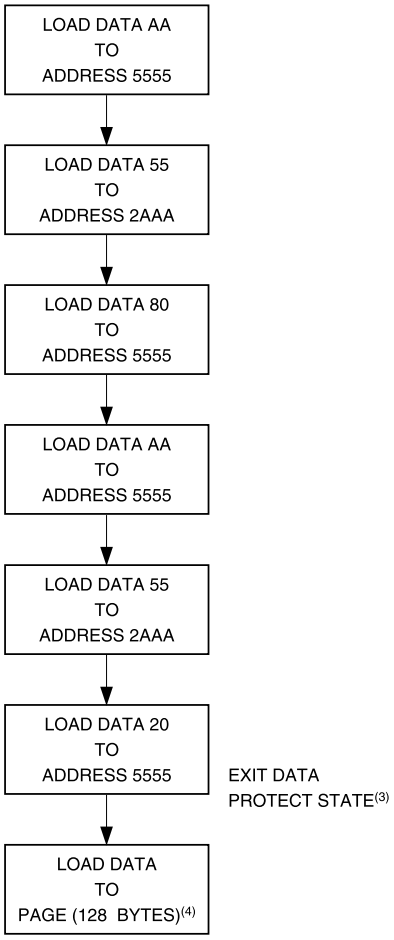

Notes:
1. Data Format: I/O7 - I/O0 (Hex);Address Format: A14 - A0 (Hex).
2. Data Protect state will be activated at end of program cycle.
3. Data Protect state will be deactivated at end of program period.
4. 128 bytes of data **MUST BE** loaded.

Software Protected Program Cycle Waveform[1][2][3]

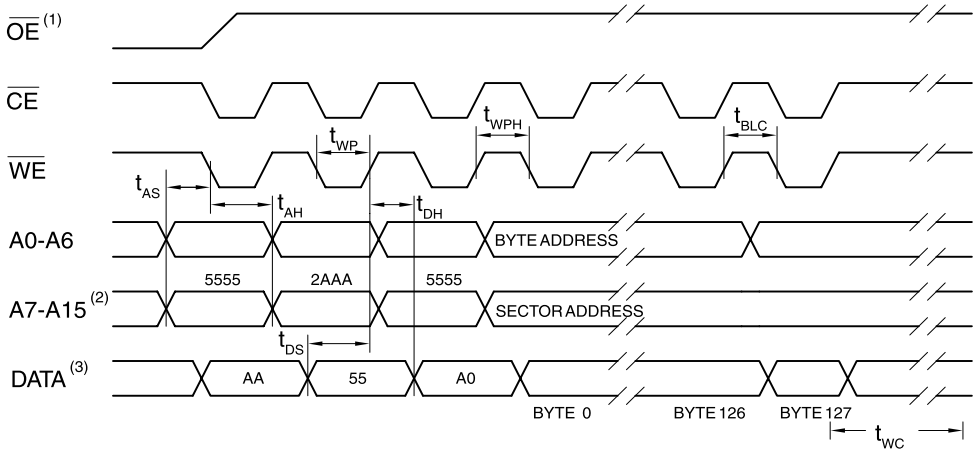

Notes:
1. A7 through A15 must specify the page address during each high-to-low transition of $\overline{WE}$ (or $\overline{CE}$) after the software code has been entered.
2. $\overline{OE}$ must be high when $\overline{WE}$ and $\overline{CE}$ are both low.
3. All bytes that are not loaded within the sector being programmed will be indeterminate.

$\overline{\text{Data}}$ Polling Characteristics[1]

Symbol	Parameter	Min	Typ	Max	Units
t_{DH}	Data Hold Time	10			ns
t_{OEH}	$\overline{OE}$ Hold Time	10			ns
t_{OE}	$\overline{OE}$ to Output Delay[2]				ns
t_{WR}	Write Recovery Time	0			ns

Notes: 1. These parameters are characterized and not 100% tested.
2. See t_{OE} spec in AC Read Characteristics.

$\overline{\text{Data}}$ Polling Waveforms

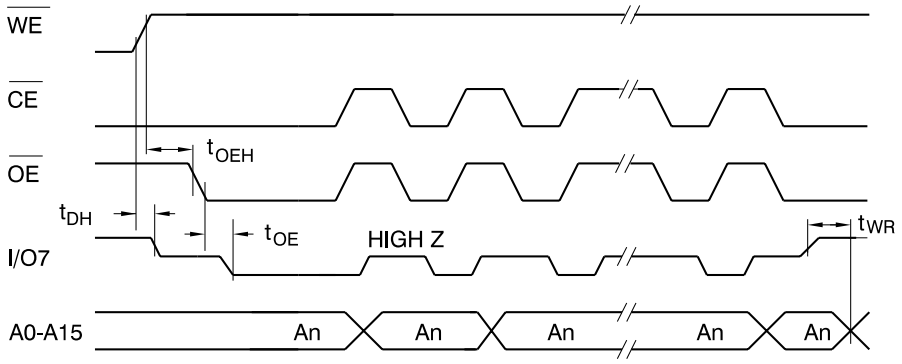

Toggle Bit Characteristics[1]

Symbol	Parameter	Min	Typ	Max	Units
t_{DH}	Data Hold Time	10			ns
t_{OEH}	$\overline{OE}$ Hold Time	10			ns
t_{OE}	$\overline{OE}$ to Output Delay[2]				ns
t_{OEHP}	$\overline{OE}$ High Pulse	150			ns
t_{WR}	Write Recovery Time	0			ns

Notes: 1. These parameters are characterized and not 100% tested.
2. See t_{OE} spec in AC Read Characteristics.

Toggle Bit Waveforms[1][2][3]

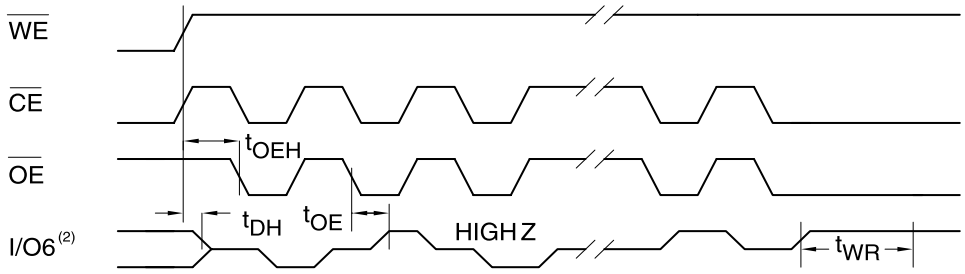

Notes: 1. Toggling either $\overline{OE}$ or $\overline{CE}$ or both $\overline{OE}$ and $\overline{CE}$ will operate toggle bit.
2. Beginning and ending state of I/O6 will vary.
3. Any address location may be used but the address should not vary.

Software Product Identification Entry[1]

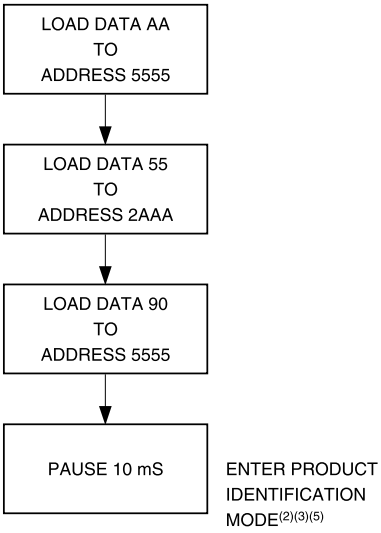

Software Product Identification Exit[1]

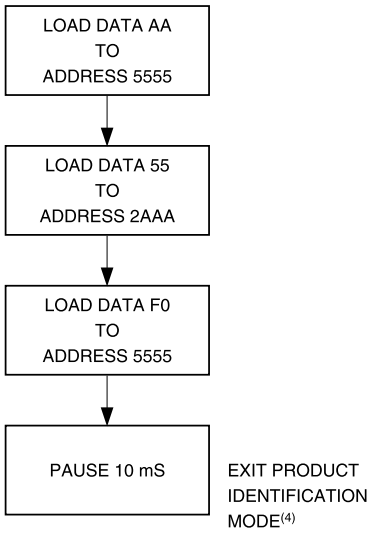

Notes:
1. Data Format: I/O7 - I/O0 (Hex); Address Format: A14 - A0 (Hex).
2. A1 - A15 = V_{IL}. Manufacturer Code is read for A0 = V_{IL}; Device Code is read for A0 = V_{IH}.
3. The device does not remain in identification mode if powered down.
4. The device returns to standard operation mode.
5. Manufacturer Code is 1F. The Device Code is 5D.

NORMALIZED SUPPLY CURRENT vs. TEMPERATURE

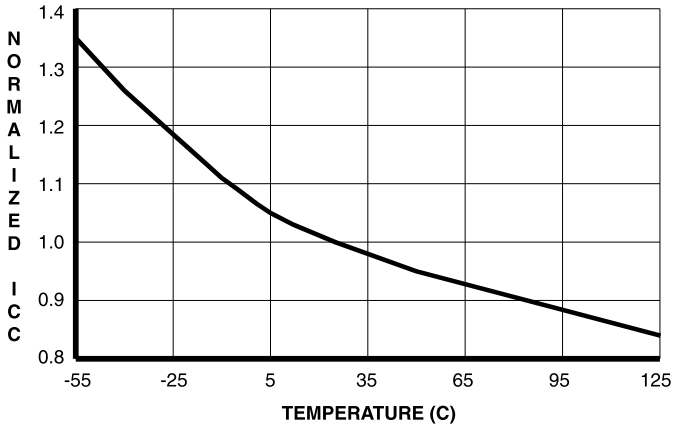

NORMALIZED SUPPLY CURRENT vs. ADDRESS FREQUENCY

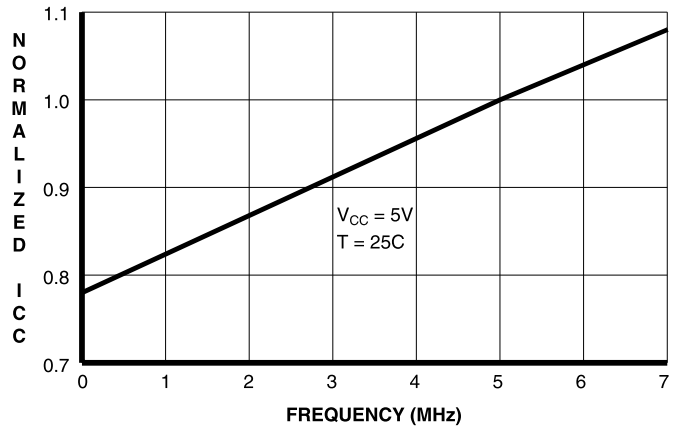

NORMALIZED SUPPLY CURRENT vs. SUPPLY VOLTAGE

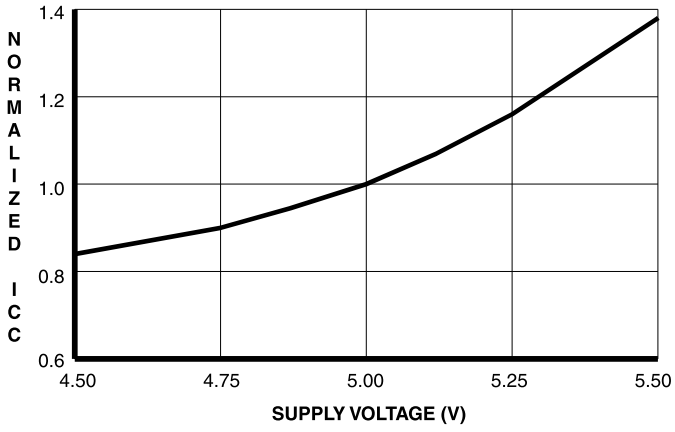

Ordering Information

t_{ACC} (ns)	I_{CC} (mA)		Ordering Code	Package	Operation Range
	Active	Standby			
70	50	0.1	AT29C512-70JC AT29C512-70PC AT29C512-70TC	32J 32P6 32T	Commercial (0° to 70°C)
	50	0.1	AT29C512-70JI AT29C512-70TI	32J 32T	Industrial (-40° to 85°C)
90	50	0.1	AT29C512-90JC AT29C512-90PC AT29C512-90TC	32J 32P6 32T	Commercial (0° to 70°C)
	50	0.3	AT29C512-90JI AT29C512-90PI AT29C512-90TI	32J 32P6 32T	Industrial (-40° to 85°C)
120	50	0.1	AT29C512-12JC AT29C512-12PC AT29C512-12TC	32J 32P6 32T	Commercial (0° to 70°C)
	50	0.3	AT29C512-12JI AT29C512-12PI AT29C512-12TI	32J 32P6 32T	Industrial (-40° to 85°C)
150	50	0.1	AT29C512-15JC AT29C512-15PC AT29C512-15TC	32J 32P6 32T	Commercial (0° to 70°C)
	50	0.3	AT29C512-15JI AT29C512-15PI AT29C512-15TI	32J 32P6 32T	Industrial (-40° to 85°C)

Note: Not recommended for New Designs.

Package Type	
32J	32-lead, Plastic J-leaded Chip Carrier (PLCC)
32P6	32-pin, 0.600" Wide, Plastic Dual Inline Package (PDIP)
32T	32-lead, Thin Small Outline Package (TSOP)

Packaging Information

32J – PLCC

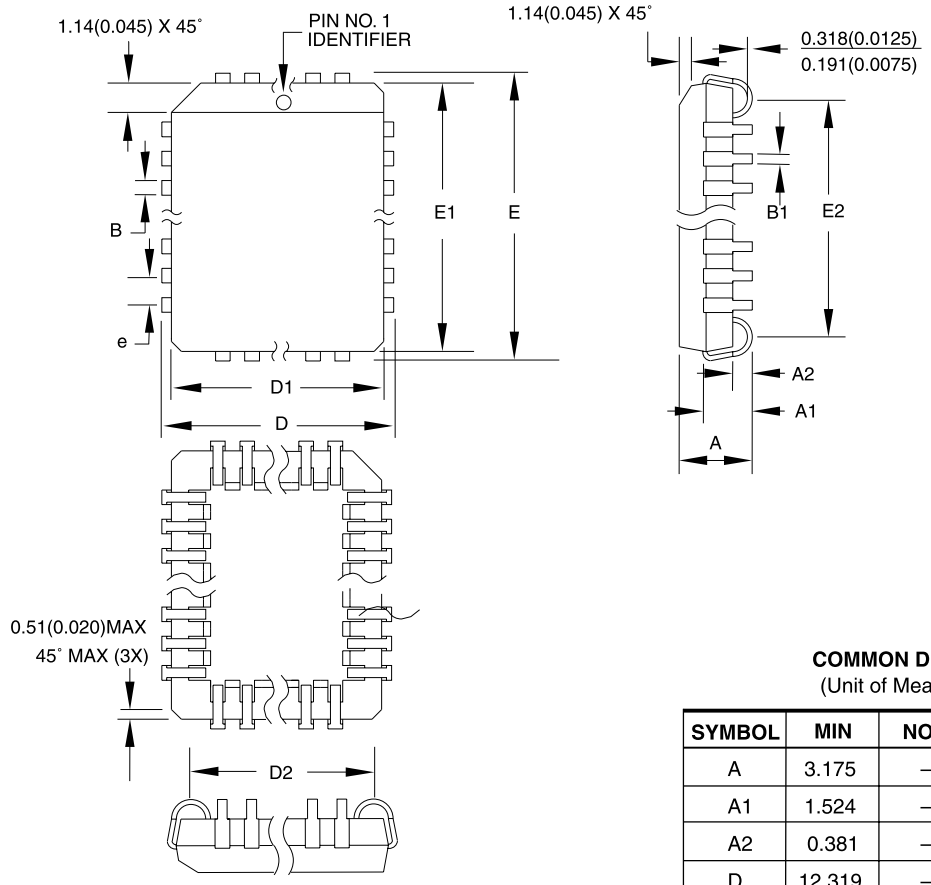

COMMON DIMENSIONS
(Unit of Measure = mm)

SYMBOL	MIN	NOM	MAX	NOTE
A	3.175	–	3.556	
A1	1.524	–	2.413	
A2	0.381	–	–	
D	12.319	–	12.573	
D1	11.354	–	11.506	Note 2
D2	9.906	–	10.922	
E	14.859	–	15.113	
E1	13.894	–	14.046	Note 2
E2	12.471	–	13.487	
B	0.660	–	0.813	
B1	0.330	–	0.533	
e	1.270 TYP			

Notes:
1. This package conforms to JEDEC reference MS-016, Variation AE.
2. Dimensions D1 and E1 do not include mold protrusion. Allowable protrusion is .010"(0.254 mm) per side. Dimension D1 and E1 include mold mismatch and are measured at the extreme material condition at the upper or lower parting line.
3. Lead coplanarity is 0.004" (0.102 mm) maximum.

10/04/01

	TITLE	DRAWING NO.	REV.
2325 Orchard Parkway San Jose, CA 95131	**32J**, 32-lead, Plastic J-leaded Chip Carrier (PLCC)	32J	B

32P6 – PDIP

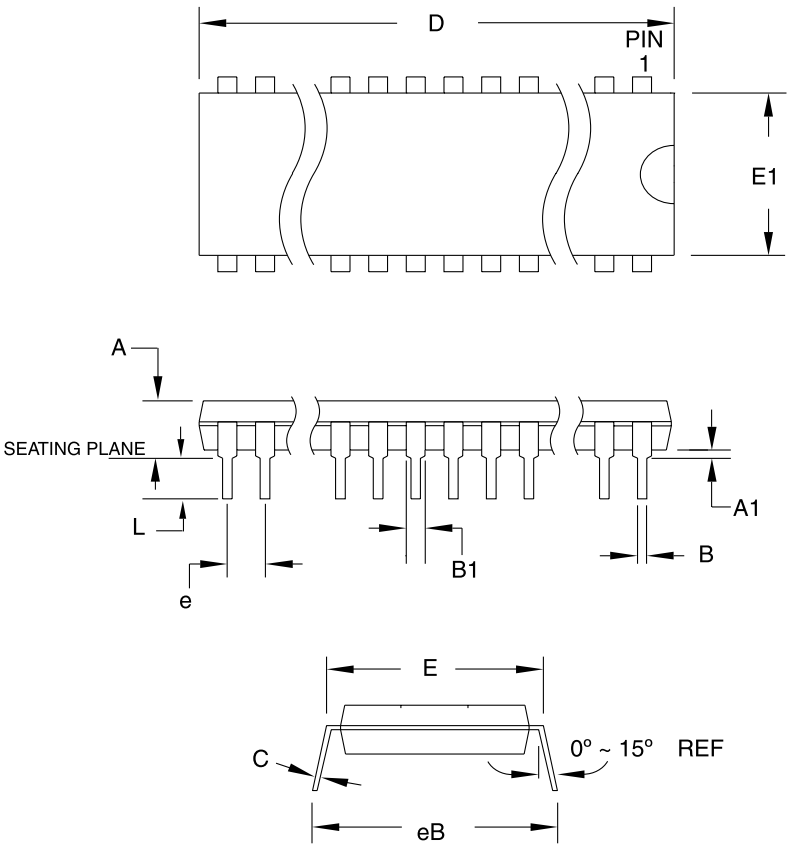

COMMON DIMENSIONS
(Unit of Measure = mm)

SYMBOL	MIN	NOM	MAX	NOTE
A	–	–	4.826	
A1	0.381	–	–	
D	41.783	–	42.291	Note 1
E	15.240	–	15.875	
E1	13.462	–	13.970	Note 1
B	0.356	–	0.559	
B1	1.041	–	1.651	
L	3.048	–	3.556	
C	0.203	–	0.381	
eB	15.494	–	17.526	
e	2.540 TYP			

Note: 1. Dimensions D and E1 do not include mold Flash or Protrusion. Mold Flash or Protrusion shall not exceed 0.25 mm (0.010").

09/28/01

	TITLE	DRAWING NO.	REV.
2325 Orchard Parkway San Jose, CA 95131	**32P6**, 32-lead (0.600"/15.24 mm Wide) Plastic Dual Inline Package (PDIP)	32P6	B

32T – TSOP

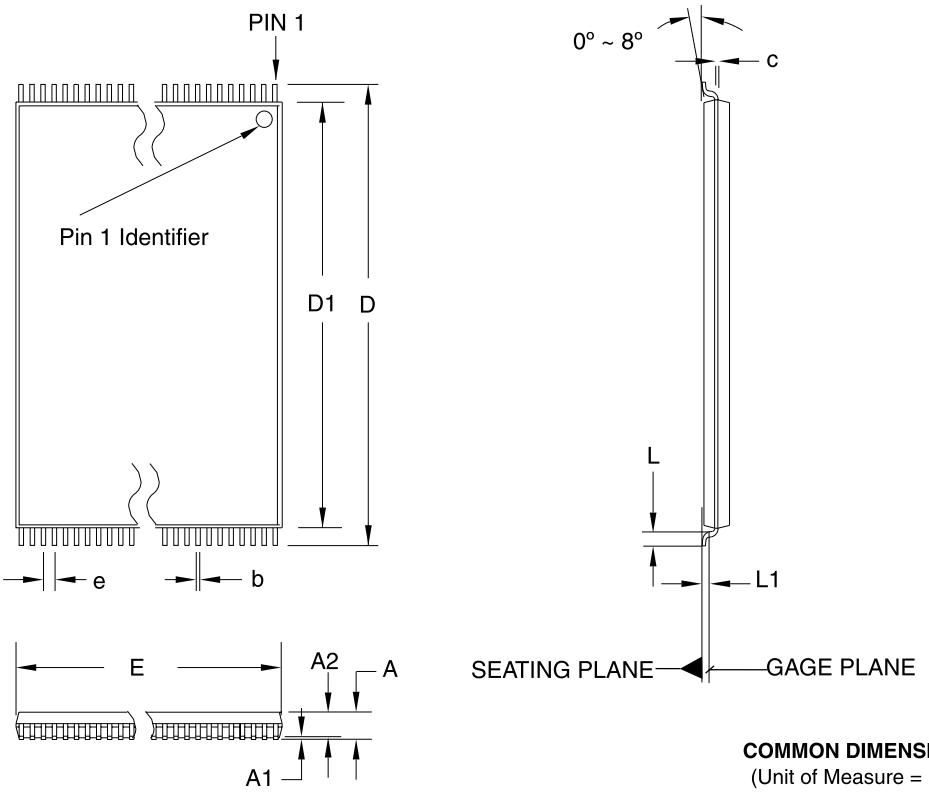

COMMON DIMENSIONS
(Unit of Measure = mm)

SYMBOL	MIN	NOM	MAX	NOTE
A	–	–	1.20	
A1	0.05	–	0.15	
A2	0.95	1.00	1.05	
D	19.80	20.00	20.20	
D1	18.30	18.40	18.50	Note 2
E	7.90	8.00	8.10	Note 2
L	0.50	0.60	0.70	
L1		0.25 BASIC		
b	0.17	0.22	0.27	
c	0.10	–	0.21	
e		0.50 BASIC		

Notes:
1. This package conforms to JEDEC reference MO-142, Variation BD.
2. Dimensions D1 and E do not include mold protrusion. Allowable protrusion on E is 0.15 mm per side and on D1 is 0.25 mm per side.
3. Lead coplanarity is 0.10 mm maximum.

10/18/01

	TITLE	DRAWING NO.	REV.
2325 Orchard Parkway San Jose, CA 95131	**32T**, 32-lead (8 x 20 mm Package) Plastic Thin Small Outline Package, Type I (TSOP)	32T	B



Atmel Headquarters

Corporate Headquarters
2325 Orchard Parkway
San Jose, CA 95131
TEL 1(408) 441-0311
FAX 1(408) 487-2600

Europe
Atmel Sarl
Route des Arsenaux 41
Case Postale 80
CH-1705 Fribourg
Switzerland
TEL (41) 26-426-5555
FAX (41) 26-426-5500

Asia
Room 1219
Chinachem Golden Plaza
77 Mody Road Tsimshatsui
East Kowloon
Hong Kong
TEL (852) 2721-9778
FAX (852) 2722-1369

Japan
9F, Tonetsu Shinkawa Bldg.
1-24-8 Shinkawa
Chuo-ku, Tokyo 104-0033
Japan
TEL (81) 3-3523-3551
FAX (81) 3-3523-7581

Atmel Operations

Memory
2325 Orchard Parkway
San Jose, CA 95131
TEL 1(408) 441-0311
FAX 1(408) 436-4314

Microcontrollers
2325 Orchard Parkway
San Jose, CA 95131
TEL 1(408) 441-0311
FAX 1(408) 436-4314

La Chantrerie
BP 70602
44306 Nantes Cedex 3, France
TEL (33) 2-40-18-18-18
FAX (33) 2-40-18-19-60

ASIC/ASSP/Smart Cards
Zone Industrielle
13106 Rousset Cedex, France
TEL (33) 4-42-53-60-00
FAX (33) 4-42-53-60-01

1150 East Cheyenne Mtn. Blvd.
Colorado Springs, CO 80906
TEL 1(719) 576-3300
FAX 1(719) 540-1759

Scottish Enterprise Technology Park
Maxwell Building
East Kilbride G75 0QR, Scotland
TEL (44) 1355-803-000
FAX (44) 1355-242-743

RF/Automotive
Theresienstrasse 2
Postfach 3535
74025 Heilbronn, Germany
TEL (49) 71-31-67-0
FAX (49) 71-31-67-2340

1150 East Cheyenne Mtn. Blvd.
Colorado Springs, CO 80906
TEL 1(719) 576-3300
FAX 1(719) 540-1759

Biometrics/Imaging/Hi-Rel MPU/
High Speed Converters/RF Datacom
Avenue de Rochepleine
BP 123
38521 Saint-Egreve Cedex, France
TEL (33) 4-76-58-30-00
FAX (33) 4-76-58-34-80

e-mail
literature@atmel.com

Web Site
http://www.atmel.com

© Atmel Corporation 2002.
Atmel Corporation makes no warranty for the use of its products, other than those expressly contained in the Company's standard warranty which is detailed in Atmel's Terms and Conditions located on the Company's web site. The Company assumes no responsibility for any errors which may appear in this document, reserves the right to change devices or specifications detailed herein at any time without notice, and does not make any commitment to update the information contained herein. No licenses to patents or other intellectual property of Atmel are granted by the Company in connection with the sale of Atmel products, expressly or by implication. Atmel's products are not authorized for use as critical components in life support devices or systems.

ATMEL® is the registered trademark of Atmel.

Other terms and product names may be the trademarks of others.

Printed on recycled paper.

0456F–FLASH–12/02 /xM