

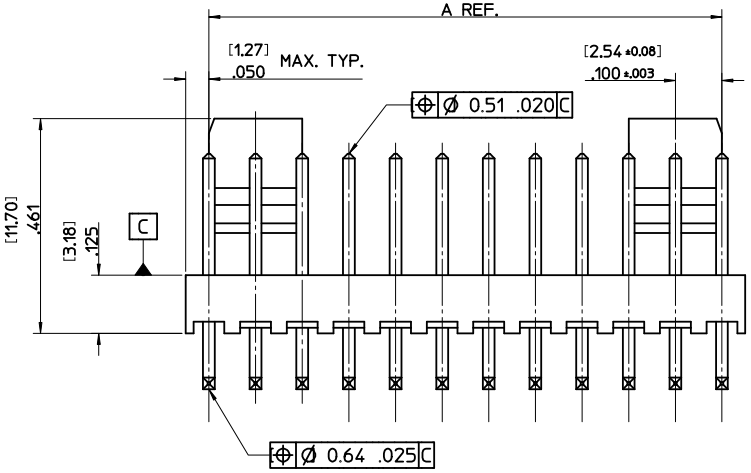

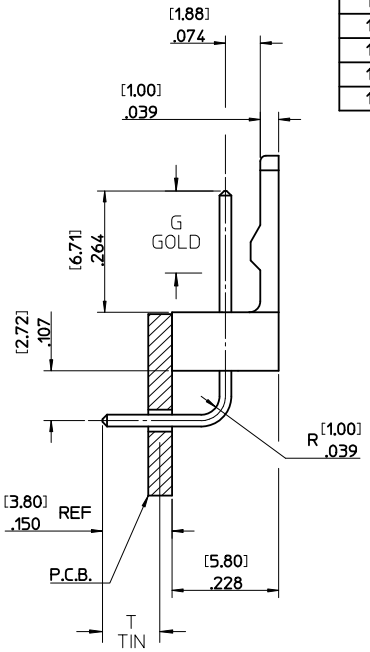

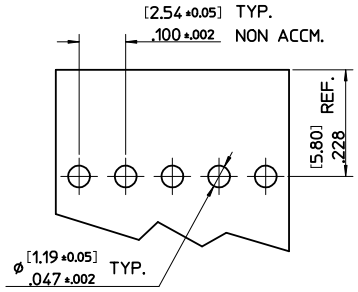

RECOMENDED P.C.B. BOARD

PIN FINISH: REFLOWED MATTE TIN: 0.00152/.000060 MIN OVER 0.00127/.000050 MIN NICKEL.			
GOLD LOC G	N/A		
TIN LOC T	OVERALL		
NO. OF CCTS	DIM. A	DIM. B	ENG. NO. / PART NO.
2	2.54/.100	5.08/.200	AE-7395-2B / 22-05-7028
3	5.08/.200	7.62/.300	AE-7395-3B / 22-05-7038
4	7.62/.300	10.16/.400	AE-7395-4B / 22-05-7048
5	10.16/.400	12.70/.500	AE-7395-5B / 22-05-7058
6	12.70/.500	15.24/.600	AE-7395-6B / 22-05-7068
7	15.24/.600	17.78/.700	AE-7395-7B / 22-05-7078
8	17.78/.700	20.32/.800	AE-7395-8B / 22-05-7088
9	20.32/.800	22.86/.900	AE-7395-9B / 22-05-7098
10	22.86/.900	25.40/1.000	AE-7395-10B / 22-05-7108
11	25.40/1.000	27.94/1.100	AE-7395-11B / 22-05-7118
12	27.94/1.100	30.48/1.200	AE-7395-12B / 22-05-7128
13	30.48/1.200	33.02/1.300	AE-7395-13B / 22-05-7138
14	33.02/1.300	35.56/1.400	AE-7395-14B / 22-05-7148
15	35.56/1.400	38.10/1.500	AE-7395-15B / 22-05-7158
16	38.10/1.500	40.64/1.600	AE-7395-16B / 22-05-7168

PIN FINISH: SELECT GOLD: 0.00051/.000020 MIN SELECT MATTE TIN: 0.00254/.000100 OVER 0.00127/.000050 MIN NICKEL.	
GOLD LOC G	4.57/.180
TIN LOC T	3.43/.135
ENG. NO.	PART NO.
AE-7395-2BG	22-12-4022
AE-7395-3BG	22-12-4032
AE-7395-4BG	22-12-4042
AE-7395-5BG	22-12-4052
AE-7395-6BG	22-12-4062
AE-7395-7BG	22-12-4072
AE-7395-8BG	22-12-4082
AE-7395-9BG	22-12-4092
AE-7395-10BG	22-12-4102
AE-7395-11BG	22-12-4112
AE-7395-12BG	22-12-4122
AE-7395-13BG	22-12-4132
AE-7395-14BG	22-12-4142
AE-7395-15BG	22-12-4152
AE-7395-16BG	22-12-4162

NOTES:-
1. MATERIALS:
   WAFER: NYLON 6/6, UL 94, V-0, NATURAL COLOUR
   PIN: [0.64]/0.25 BRASS
2. FINISH: SEE CHART
3. PRODUCT SPECIFICATION: PS-99020-0088
4. PACKAGING SPECIFICATION: PK-7478-001
5. WAFERS STACKABLE END TO END
6. PIN SOLDERABILITY PER MOLEX SPECIFICATION SMES-152
7. PIN PUSH OUT FORCE [0.907 KG]/2.0 LBS MIN.
8. PARTS TO BE FLAT WITHIN 0.005 mm/mm or .005 IN/IN
9. THIS PART CONFORMS TO CLASS B REQUIREMENTS OF COSMETIC SPECIFICATION PS-45499-002.

AE-7395-N B _

NO. OF CCTS.
WAFER ASSY. OPTION
PLATING TYPE
BLANK: TIN
G: SELECT GOLD

CHANGE PLATING
EC NO: UCP2012-1821 2012/02/02
DRWN:MMSTROH 2012/01/03
CH'KD:MKIPPER 2011/12/22
APPR:FSMITH
DESCRIPTION
REV C

QUALITY SYMBOLS

GENERAL TOLERANCES (UNLESS SPECIFIED)

	mm	INCH
4 PLACES	± ---	± ---
3 PLACES	± ---	± .010
2 PLACES	± 0.25	± .015
1 PLACE	± 0.38	± ---
ANGULAR ± 2 °		

DRAFT WHERE APPLICABLE MUST REMAIN WITHIN DIMENSIONS

DIMENSION STYLE: MM/IN
SCALE: 5:1
DESIGN UNITS: METRIC
THIRD ANGLE PROJECTION

DRAWN BY	JDENNEHY	DATE 2005/05/13
CHECKED BY	GMCSWEENEY	DATE 2005/05/27
APPROVED BY	JDENNEHY	DATE 2005/05/27

TITLE: WAFER, R/A FRICTION LOCK (2.54)/.100 CENTERS (0.64)/.025 SQ. PIN

MOLEX INCORPORATED

MATERIAL NO.: SEE CHART
DOCUMENT NO.: SD-7395-001
SHEET NO.: 1 OF 1
SIZE: C

THIS DRAWING CONTAINS INFORMATION THAT IS PROPRIETARY TO MOLEX INCORPORATED AND SHOULD NOT BE USED WITHOUT WRITTEN PERMISSION