THIS DRAWING IS UNPUBLISHED. RELEASED FOR PUBLICATION -. -.
© COPYRIGHT By -. ALL RIGHTS RESERVED.

LOC	DIST	REVISIONS					
CM	00	#	LTR	DESCRIPTION	DATE	DBN	APVD
			R1	REVISED PER ECR-12-011660	24JAN13	KH	TM

1 PARTS COMPLY TO AMP SOLDERABILITY SPECIFICATION 109-11-3.

2 CONTACT IS STAMPED FROM PRE-PLATED STOCK WHICH IS PLATED OVERALL WITH 0.00127 [.000050] NICKEL, THEN STRIPED WITH 0.00076 [.000030] GOLD IN CONTACT AREA INDICATED AND TIN-LEAD ON SOLDER TAIL END.

3 CIRCUIT IDENTIFICATION CHARACTERS ARE ADJACENT TO THE INDICATED CAVITIES, BUT LOCATION AND ORIENTATION MAY DIFFER FROM PRINT.

4 CONTACT IS PLATED OVERALL WITH 0.00127 [.000050] NICKEL, THEN 0.00076 [.000030] GOLD OVER CONTACT LENGTH INDICATED AND MATTE TIN ON SOLDER TAIL END.

5 SUPERSEDED BY 350765-5

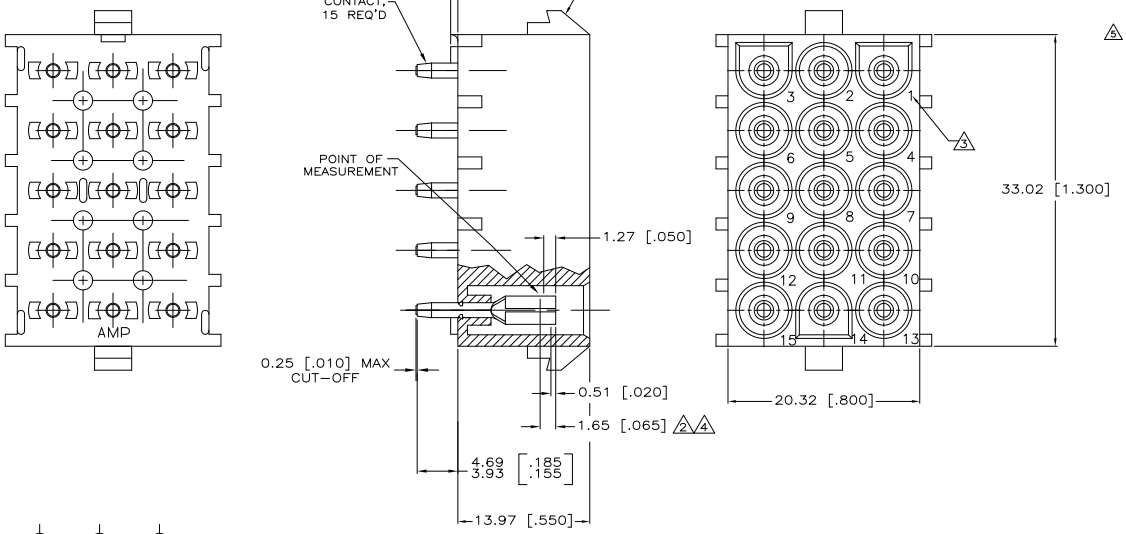

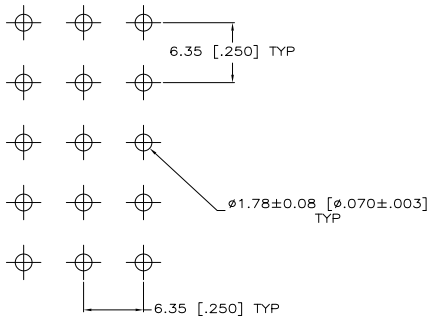

RECOMMENDED LAYOUT FOR 1.58 [.062] THICK PC BOARD

PH BRZ GOLD 4	NYLON, NATURAL	350765-5
PH BRZ TIN	NYLON, NATURAL	350765-4
5 PH BRZ GOLD 2	NYLON, NATURAL	350765-3
CONTACT	HOUSING	PART NO

THIS DRAWING IS A CONTROLLED DOCUMENT.

DIMENSIONS: mm [INCHES]

CLEARANCE UNLESS OTHERWISE SPECIFIED:
0 PLC ±
1 PLC ±
2 PLC ±
3 PLC ± 0.13 [.005]
4 PLC ±
ANGLES ±

MATERIAL: SEE TABLE
FINISH: SEE TABLE

DBN K. WHITAKER 11OCT2005
CHK S. RIDGILL 11OCT2005
APVD S. RIDGILL 11OCT2005
PRODUCT SPEC
APPLICATION SPEC —
WEIGHT

TE Connectivity

NAME 15 CIRCUIT UNIVERSAL MATE-N-LOK (TM) P.C. BOARD SOCKET HEADER ASSEMBLY

SIZE A1 | CAGE CODE 00779 | DRAWING NO C-350765 | RESTRICTED TO

CUSTOMER DRAWING | SCALE 5:1 | SHEET 1 OF 1 | REV R1