16/05/2014

Code	Description
BM1E11Z11	Limit switch
Casing	Limit switch - Metal casing IP66 - 40mm width - 1 cable inlet
Electical connection	Cable inlet(s) for PG13.5 cable gland
Operation head	Stainless steel plain plunger
Contacts	Z11: Snap action contacts 1NO+1NC



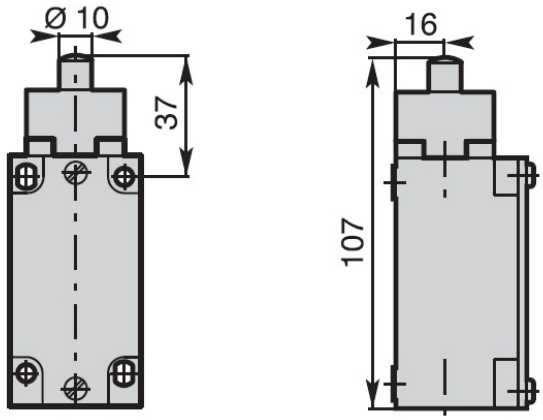

Travel and Operation Diagram

Z11: Snap action contacts
1NO+1NC

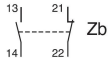

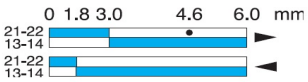

Positive Opening
Operation
accorting to
IEC 947-5-1

General Technical Data

			Metal Casing
Standards			Devices conform with international IEC 947-5-1 and European EN 60 947-5-1 standards
Certifications - Approvals			UL - CSA - IMQ
Air temperature near the device			
– during operation		°C	– 25 ... + 70
– for storage		°C	– 30 ... + 80
Protection against electrical shocks (according to IEC 536)			Class I
Degree of protection (according to IEC 529 and EN 60 529)			IP 66**
Rated insulation voltage U_i			
- according to IEC 947-1 and EN 60-947-1			500 V (degree of pollution 3) (400 V for contacts type X12P, X21P, W03P)
- according to UL 508 and CSA C22-2 n° 14			A 600, Q 600 (A 300, Q 300 for contacts type X12P, X21P, W03P)
Rated impulse withstand voltage U_{imp} (according IEC 947-1 and EN 60 947-1)		kV	6
Conventional free air thermal current I_{th} (according to IEC 947-5-1 and EN 60 947-5-1) θ < 40 °C		A	10
Short-circuit protection **U_e** < 500 V a.c. - gG (gl) type fuses		A	10
Rated operational current			
I_e / AC-15 (according to IEC 947-5-1)	24 V - 50/60 Hz	A	10
	120 V - 50/60 Hz	A	6
	230 V - 50/60 Hz	A	3.1
	240 V - 50/60 Hz	A	3
	400 V - 50/60 Hz	A	1.8
I_e / DC-13 (according to IEC 947-5-1)	24 V - d.c.	A	2.8
	125 V - d.c.	A	0.55
	250 V - d.c.	A	0.27
Switching frequency		Cycles/h	3600
Load factor			0.5
Resistance between contacts		mΩ	< 25
Connecting terminals			M3.5 (+, –) pozidriv 2 screw with cable clamp (M3 for 3 poles contacts type)
Terminal for protective conductor			M3.5 (+, –) pozidriv 2 screw with cable clamp
Connecting capacity		1 or 2 x mm²	0.75 ... 2.5 (0.34... 1.5 for 3 poles contacts type)
Terminal marking			According to EN 50 013
Mechanical durability		Millions of operations	30 / 25 / 10 BM•E/P { 11...13; 21...23; 31...33 / 41...44; 51...54; 61...75 / 91...93; 99

** BM•E54 - P92 - E92 - P93 - E93: PROTECTION DEGREE IP65. - For the complete list of approved products contact our technical department.

IMQ listed values

Comepi Srl
23899 Robbiate (Lecco) Italy – Via Novarino 9/L Tel. +39 039 9903468 Fax +39 039 9906203 www.comepi.it comepi@comepi.it

Comepi S.r.l. reserves the right to modify its products and to change any details in this datasheet at any time without prior notice.
Comepi in not responsable for improper use of their electrical devices: in case you have any doubt or perplexity please contact our Technical Service.