

# MAGNETIC SENSORS

## Ø 12 HALL EFFECT

12÷30 V DC - 3 WIRES - PNP OUTPUT

- Fast 50 ms ON/OFF
- Sensing models: Front end travel
  Bilateral side travel
- Choice of magnet targets

INFRA

HS Series

## IDENTIFICATION CODE

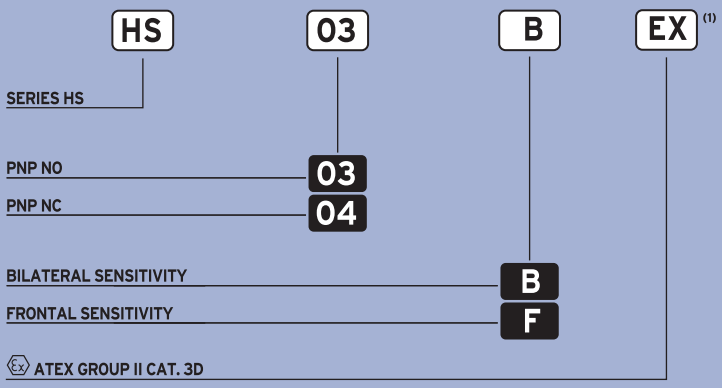


| MAGNETIC FLUX (Gauss) | |
|---|---|
| • SENSOR ON | ≥ 25 (Tip. 15 at 25°C) |
| • SENSORE OFF | ≤ 5 (Tip. 11 at 25°C) |
| • HYSTERESIS | Max. diff. 7 (Tip. 4 at 25°C) |
| NOMINAL VOLTAGE | 12 ÷ 30 VDC (-15/+10%) |
| RESIDUAL RIPPLE | ≤ 10% |
| MAX. CURRENT OUTPUT | 200 mA |
| ABSORPTION AT 30 VDC | ≤ 10 mA |
| VOLTAGE DROP (Sensor ON) | < 1.8 V |
| YELLOW LED | Output indicator |
| GREEN LED | Supply indicator |
| SWITCHING FREQUENCY (max.) | 10 kHz |
| TIME RESPONSE | 100 ms |
| START UP DELAY | 50 ms |
| SHORT CIRCUIT PROTECTION | Present (self-resetting) |
| ELECTRIC PROTECTIONS | Against reversal polarity - inductive loads |
| TEMPERATURE LIMITS | - 20 ÷ +60 °C |
| PROTECTION DEGREE | IP 67 |
| CABLE LENGTH | 2 m |
| CABLE SECTION | 3 x 0.25 mm² |
| HOUSING MATERIAL | Nickel-plated brass |
| WEIGHT (Approximately) | 110 g |

(1) Device marking Ⓔx II 3D IP67 T6X.

## WIRING DIAGRAMS

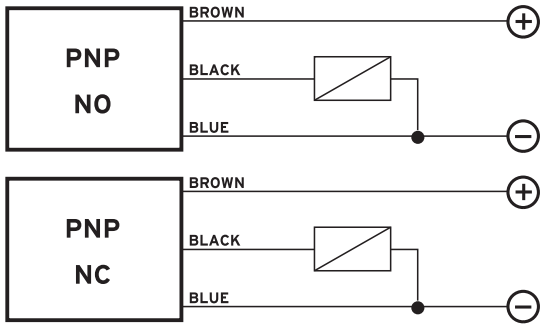


## HALL EFFECT SENSOR/MAGNETE SWITCHING DISTANCE (mm)

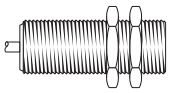

| DIAMETER 12 Distance | Hysteresis | |
|---|---|---|
| 33 | 4 | MG01 |
| 30 | 4 | MG02 |
| 18 | 5 | MG03 |
| 41 | 6,5 | MG04 |
| 35 | 7 | MG05 |

**WARNING:** The data specified in this table have an approximate value because they depend on the magnet position, on the material on which it is applied (ferromagnetic or not) and because they are related to the magnet during the frontal approach.

## DIMENSIONS (mm)

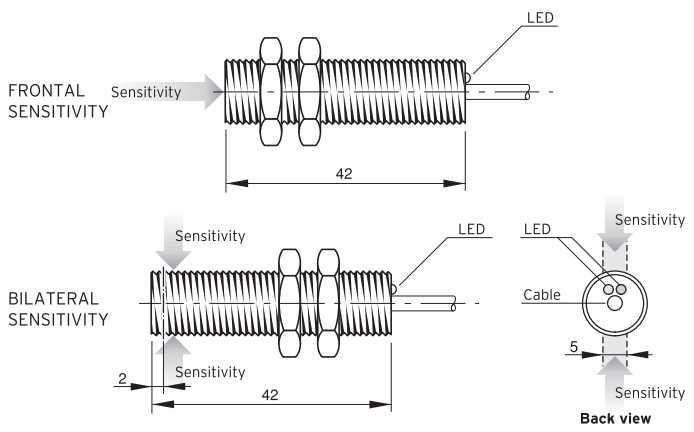


## MAGNETS DIMENSIONS (mm)

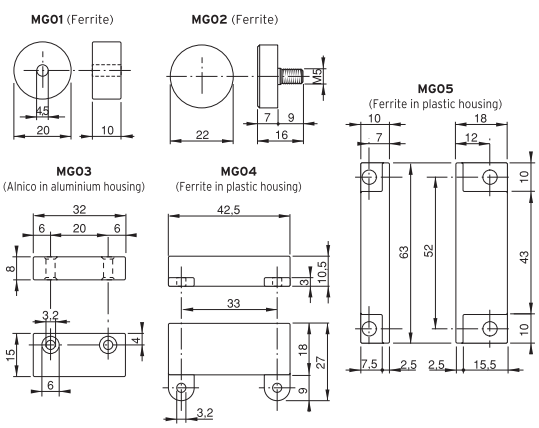


MAGNETIC



Copyright © 2000 Infra Srl. All rights reserved.