

RECTANGULAR INDUCTIVE SENSORS

16,5X30X10

10÷30 V DC - 3 WIRES NPN OR PNP OUTPUT

- Range, 1,5mm - shielded
- Compact housing models
- Cable or M8 quick connect models
- 200mA NPN or PNP
- Operation LED

ISP Series

IDENTIFICATION CODE

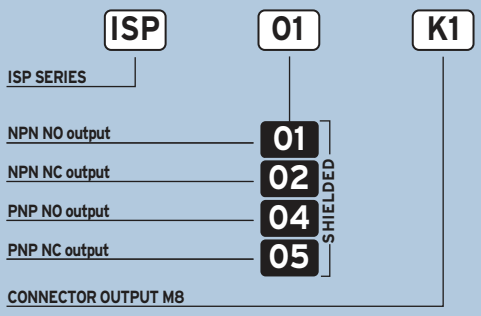

	SHIELDED
NOMINAL SWITCHING DISTANCE (Sn)	**1,5 mm**
NOMINAL VOLTAGE	10 ÷ 30 VDC (-15 / +10%)
RESIDUAL RIPPLE	≤ 10%
HYSTERESIS	< 10%
MAX. OUTPUT CURRENT	200 mA
RESIDUAL CURRENT	< 10 mA
VOLTAGE DROP (Sensor ON)	< 1.2 V (I = 100 mA)
OPERATION LED	Yellow
SWITCHING FREQUENCY	500 Hz
START UP DELAY	≤ 75 ms
REPEATABILITY	≤ 3%
SHORT CIRCUIT PROTECTION	Present (self-resetting)
ELECTRIC PROTECTIONS	Against polarity reversal - inductive loads
TEMPERATURE LIMITS	- 25 ÷ +70 °C
PROTECTION DEGREE	IP 67
CABLE LENGTH	2 m
CABLE SECTION	3 x 0,14 mm²
HOUSING MATERIAL	Nickel-plated brass
WEIGHT - Cable output -	80 g
WEIGHT - K1 connector output -	40 g

WIRING DIAGRAMS

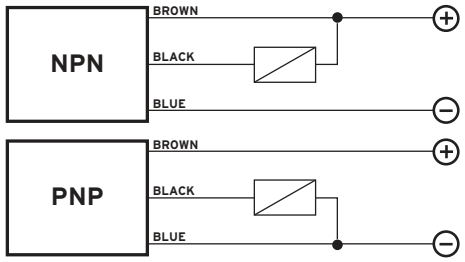

CONNECTION WITH CONNECTOR M8 (K1)

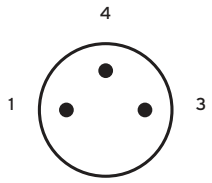

View of tripole male connector

CONTACTS CONFIGURATION

Available	Contacts numbers		
	1	3	4
(NO or NC)	+	–	NO/NC

DIMENSIONS (mm)

CONFIGURATION WITH CABLE

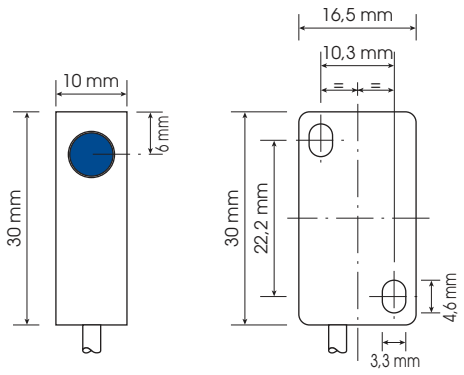

CONNECTOR K1

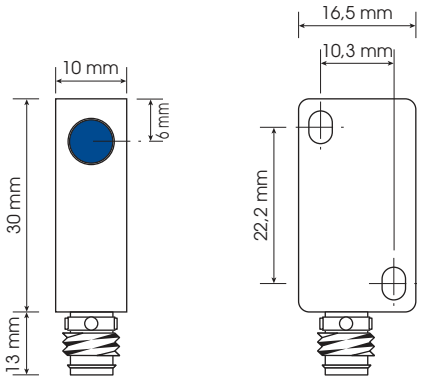

Copyright © 2000 Infra Srl. All rights reserved.