

INDUCTIVE SENSORS

Ø 30
NAMUR

- 5÷24 V DC - 2 WIRES
- Conforming to EN 60947-5-6 and Atex directive
- Range, 10mm to 15mm - shielded, not shielded
- Nickel plated brass
- Cable or M12 quick connect models

IS Series

IDENTIFICATION CODE

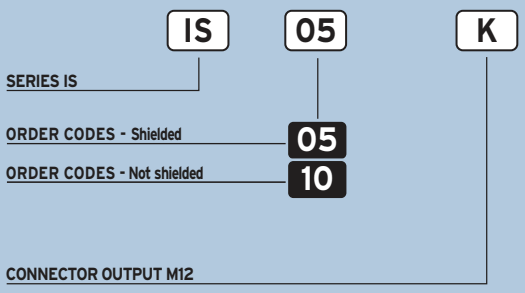

	SHIELDED	NOT SHIELDED
NOMINAL SWITCHING DISTANCE (Sn)	10 mm	15 mm
NOMINAL VOLTAGE (Load resistence 1 K)	7.7 ÷ 9 V DC	
DC SUPPLY VOLTAGE	5 ÷ 24 V DC	
RESIDUAL RIPPLE	≤ 10%	
HYSTERESIS	≤ 10%	
OUTPUT CURRENT (Metal present)	≤ 1 mA	
OUTPUT CURRENT (Metal absent)	≤ 3 mA	
SWITCHING FREQUENCY	500 Hz	
REPEATABILITY	≤ 3%	
TEMPERATURE LIMITS	-25 ÷ +60 °C	
PROTECTION DEGREE	IP 67	
DEVICE MARKING	Ⓔx II 3D IP67 T6X	
CABLE LENGTH	2 m	
CABLE SECTION	2 x 0.25 mm²	
HOUSING MATERIAL	Nickel-plated brass	
WEIGHT - Cable output -	210 g	
WEIGHT - K connector output -	170 g	

WIRING DIAGRAMS

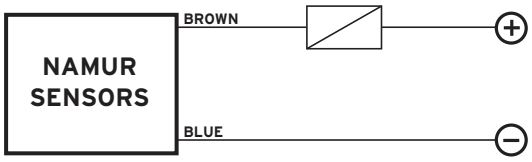

CONNECTION WITH CONNECTOR M12 (K)

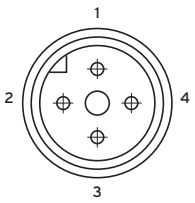

View of quadripole male connector

CONTACTS CONFIGURATION

Available	Contacts numbers			
	1	2	3	4
NAMUR	+		−	

DIMENSIONS (mm)

CONFIGURATION WITH CABLE

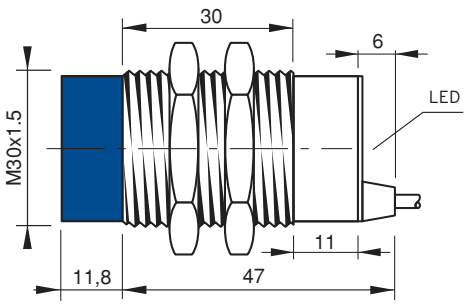

CONFIGURATION WITH CONNECTOR K

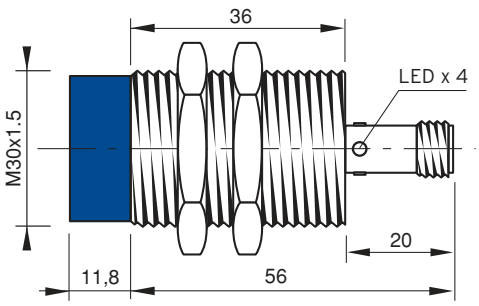

Note: the front part in blue refers to not shielded models

Copyright © 2000 Infra Srl. All rights reserved.