

AMPLIFIED INDUCTIVE SENSORS

Ø 30

10÷30 V DC 2 WIRES NO-NC PROGRAMMABLE OUTPUT

- Range, 10mm to 15mm - shielded, not shielded
- Cable or M12 quick connect models
- Nickel plated brass

INFRA

IS Series

IDENTIFICATION CODE

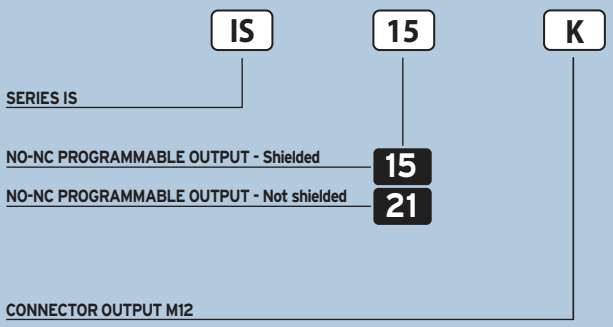

	SHIELDED	NOT SHIELDED
NOMINAL SWITCHING DISTANCE (Sn)	**10 mm**	**15 mm**
NOMINAL VOLTAGE	10 ÷ 30 VDC (-15 / +10%)	
RESIDUAL RIPPLE	≤ 10%	
HYSTERESIS	< 10%	
MAX. OUTPUT CURRENT	100 mA	
MIN. OUTPUT CURRENT	> 1,6 mA	
RESIDUAL CURRENT	< 1,6 mA	
VOLTAGE DROP	< 6,5 V (I = 100 mA)	
OPERATION LED	Yellow	
SWITCHING FREQUENCY	300 Hz	
START UP DELAY	≤ 50 ms	
REPEATABILITY	≤ 3%	
SHORT CIRCUIT PROTECTION	Present (self-resetting)	
ELECTRIC PROTECTIONS	Against polarity reversal - inductive loads	
TEMPERATURE LIMITS	- 25 ÷ +70 °C	
PROTECTION DEGREE	IP 67	
CABLE LENGTH	2 m	
CABLE SECTION	2 x 0.25 mm²	
HOUSING MATERIAL	Nickel-plated brass	
WEIGHT - Cable output -	210 g	
WEIGHT - K connector output -	170 g	

WIRING DIAGRAMS

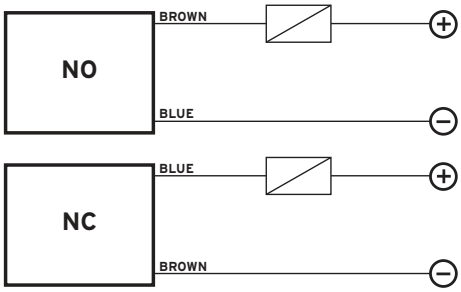

WARNING: The load can be indifferently connected in series to the blue wire or to the brown wire to simulate NPN or PNP functionning logic.

CONNECTION WITH CONNECTOR M12 (K)

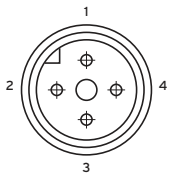

View of quadripole male connector

CONTACTS CONFIGURATION

Available	Contacts numbers			
	1	2	3	4
NO	+		−	
NC	−		+	

DIMENSIONS (mm)

CONFIGURATION WITH CABLE

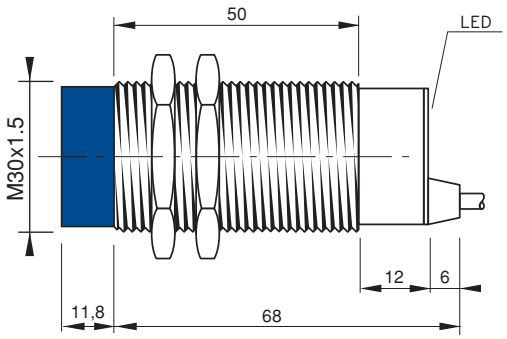

CONFIGURATION WITH CONNECTOR K

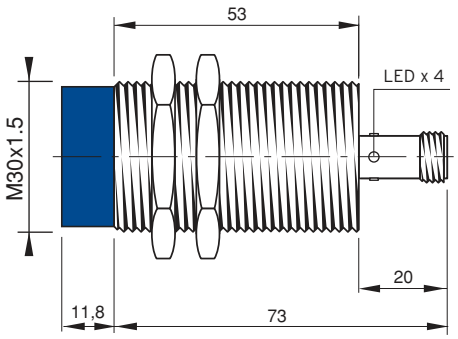

Note: the front part in blue refers to not shielded models

Copyright © 2000 Infra Srl. All rights reserved.