

AMPLIFIED INDUCTIVE SENSORS

Ø 4

10÷30 V DC - 3 WIRES NPN OR PNP OUTPUT

- Range, 0,8mm - shielded
- NO output

IS Series

IDENTIFICATION CODE

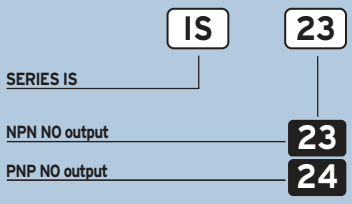

WIRING DIAGRAMS

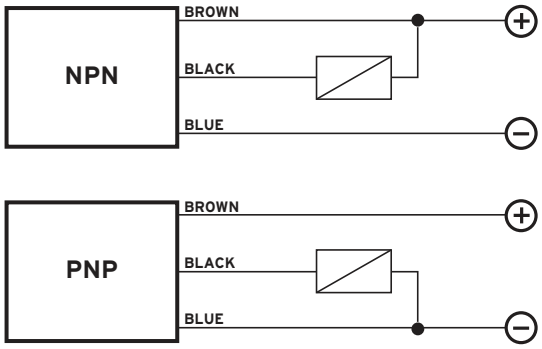

	SHIELDED
NOMINAL SWITCHING DISTANCE (Sn)	**0,8 mm**
NOMINAL VOLTAGE	10 ÷ 30 VDC (-15 / +10%)
RESIDUAL RIPPLE	≤ 10%
HYSTERESIS	< 10%
MAX. OUTPUT CURRENT	100 mA
RESIDUAL CURRENT	≤ 10 mA
VOLTAGE DROP (Sensor ON)	< 1 V (I = 100 mA)
OPERATION LED	Present
SWITCHING FREQUENCY	2000 Hz
START UP DELAY	≤ 50 ms
REPEATABILITY	≤ 1%
SHORT CIRCUIT PROTECTION	Present (self-resetting)
ELECTRIC PROTECTIONS	Against polarity reversal - inductive loads
TEMPERATURE LIMITS	- 25 ÷ +60 °C
PROTECTION DEGREE	IP 67
CABLE LENGTH	2 m
CABLE SECTION	3 x 0.14 mm²
HOUSING MATERIAL	Stainless-steel
WEIGHT - Cable output -	50 g

DIMENSIONS (mm)

CONFIGURATION WITH CABLE

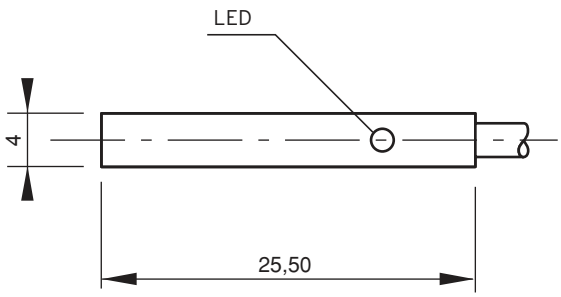

Copyright © 2000 Infra Srl. All rights reserved.