

AMPLIFIED INDUCTIVE SENSORS

Ø 18 INCREASED RANGE

10÷30 V DC - 4 WIRES NPN OR PNP OUTPUT

- Range, 8mm to 14mm - shielded, not shielded
- Short housing models
- 200mA NPN or PNP
- Operation LED
- Cable or M12 quick connect models

INFRA

IS Series

IDENTIFICATION CODE

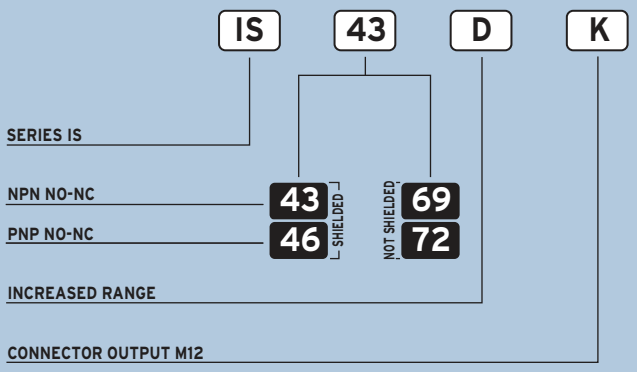

	SHIELDED	NOT SHIELDED
NOMINAL SWITCHING DISTANCE (Sn)	**8 mm**	**14 mm**
NOMINAL VOLTAGE	10 ÷ 30 VDC (-15 / +10%)	
RESIDUAL RIPPLE	≤ 10%	
HYSTERESIS	< 10%	
MAX. OUTPUT CURRENT	200 mA	
RESIDUAL CURRENT	< 10 mA	
VOLTAGE DROP (Sensor ON)	< 1.2 V (I = 100 mA)	
OPERATION LED	Yellow	
SWITCHING FREQUENCY	400 Hz	
START UP DELAY	≤ 75 ms	
REPEATABILITY	≤ 3%	
SHORT CIRCUIT PROTECTION	Present (self-resetting)	
ELECTRIC PROTECTIONS	Against polarity reversal - inductive loads	
TEMPERATURE LIMITS	- 25 ÷ +70 °C	
PROTECTION DEGREE	IP 67	
CABLE LENGTH	2 m	
CABLE SECTION	3 x 0,25 mm²	
HOUSING MATERIAL	Nickel-plated brass	
WEIGHT - Cable output -	145 g	
WEIGHT - K connector output -	95 g	

WIRING DIAGRAMS

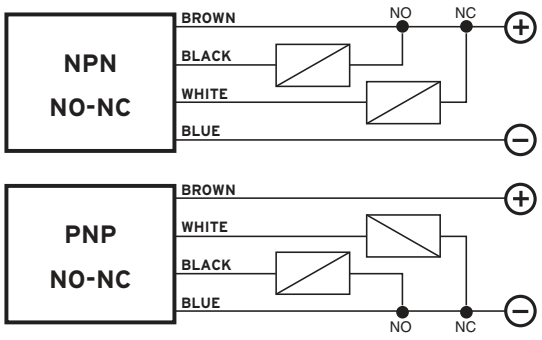

CONNECTION WITH CONNECTOR M12 (K)

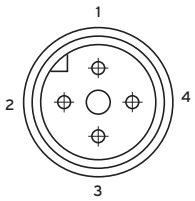

View of quadripole male connector

CONTACTS CONFIGURATION

Available	Contacts numbers			
	1	2	3	4
(NO + NC)	+	NC	−	NO

DIMENSIONS (mm)

CONFIGURATION WITH CABLE

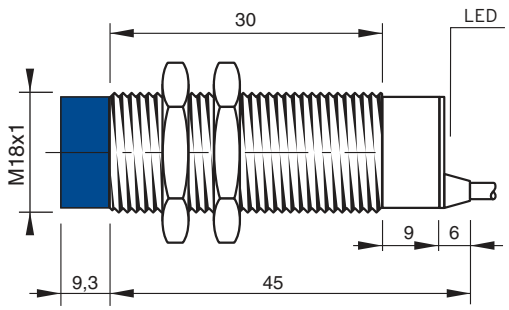

CONFIGURATION WITH CONNECTOR K

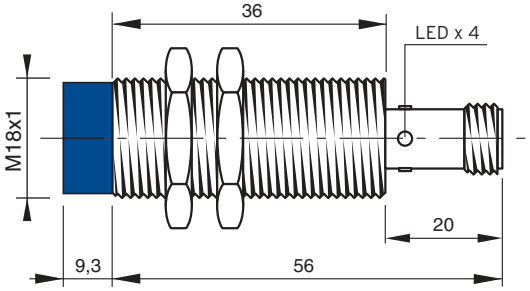

Note: The front part in blue refers to not shielded models

Copyright © 2000 Infra Srl. All rights reserved.