1.1 Indicators

temperature, humidity and pressure

The range provides the possibility to view temperature, pressure, or humidity values using different instrument formats: front panel 32x74 mm or 72x72 mm with square casing, both for panel mounting.

Liquid crystal, battery powered temperature meters are also available.

EWTM

1.1.1 EWHM 101/102 11
1.1.2 EWPM 102 12
1.1.3 EWTM 053 13
1.1.4 EWTM 101/102/202 14

EWTL

1.1.5 EWTL 300 15
1.1.6 EWTL 310 16

EWMETER

1.1.7 EWMETER 900 17

EWHM 101/102

electronic digital hygrometer



Description

The EWHM 101/102 are electronic digital hygrometers which detect the moisture percentage through an appropriate probe (EWHS 280/310) or through the 4...20 mA current signal; they are supplied in the standard 32x74 format.
The moisture value is viewed on a 2–digit display for the EWHM 101, and on a 3–digit display for the EWHM 102.
The power supply voltage is 12 V~/⎓.

Technical Data

Container: PC+ABS plastic resin with extinguishing classification UL94 V0.

Size: front panel 32x74 mm, depth 67 mm.

Mounting: panel, on 71x29 mm. hole.

Connections: on screw clamp for 2.5 mm^2 conductors.

Protection: on request, a shelter (roofing tile) with restrained mounting on the back of the instrument is supplied in order to protect the screw clamp.

Usage temperature: –5...60 °C.

Storage temperature: –30...75 °C.

Display: 2 digits for the EWHM 101, 3 digits for the EWHM 102, with 12.5 mm height.

Inputs: for EWHS 280/300/310 probe or for 4...20 mA current.

Consumption: 150 mA.

Power supply: 12 V~/⎓, ±15%.

Electrical Diagram

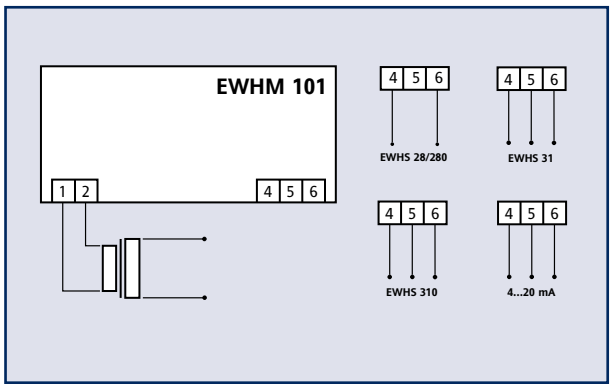

Electrical Diagram Description

1–2	Power supply
4	Probe power supply
5	gnd
6	Probe input







EWPM 102

electronic digital gauge

Description

The EWPM 102 are electronic digital gauges which detect pressure through an appropriate 2 wires probe (EWPA 007/030) or through the 4...20 mA current signal; they are supplied in the 32x74 standard format.
The measurement range varies from –0.5 to 30 Bar, according to the type of probe.
The pressure values are viewed on a 3–digit display, and the power supply voltage is 12 V~/⎓.

Technical Data

Container: PC+ABS plastic resin with extinguishing classification UL94 V0.

Size: front panel 32x74 mm, depth 67 mm.

Mounting: panel, on 71x29 mm. hole.

Connections: on screw clamp for 2.5 mm^2 conductors (one conductor only per terminal, according to VDE regulations).

Protection: on request, a shelter (roofing tile) with restrained mounting on the back of the instrument is supplied in order to protect the screw clamp.

Usage temperature: –5...60 °C.

Storage temperature: –30...75 °C.

Display: 3 digits, 12.5 mm high.

Input: for EWPA007/030 probe or for 4...20 mA current.

Consumption: 150 mA.

Power supply: 12 V~/⎓ ±15%.

Electrical Diagram

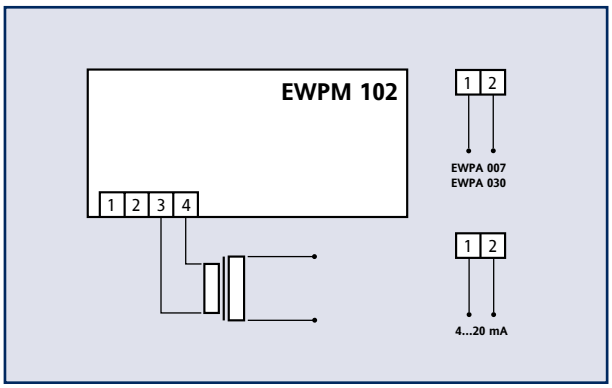

Electrical Diagram Description

1	Probe power supply
2	Probe input
3–4	Power supply





EWTM 053

electronic digital thermometer



Description

The EWTM 053 are electronic digital thermometers which detect temperature through an appropriate NTC probe (available also for PTC probe).
The measuring range goes from –50 through 110 °C (from –50 to150 °C for PTC probe).
Temperature values are viewed on a 3–digit plus sign display and the power supply is 230 V~ or 12 V~/⎓.

Technical Data

Front panel protection: IP65 classification on the front panel.

Container: in PC+ABS plastic, with extinguishing classification UL94 V0.

Size: front panel 31x64 mm, depth 33 mm (harness excluded).

Mounting: panel, on 59x26 mm hole.

Connections: fast–on 2.8 for probe, 6.3 mm for power supply.

Usage temperature: temperature from 0 to 60 °C, humidity 10...90% (non condensing).

Storage temperature: temperature –30...75 °C, humidity 10...90% (non condensing).

Display: 3 digits plus sign, 12.5 mm high.

Analogue input: for NTC probe (or PTC probe).

Measurement range: –50...110 °C (–50...140 °C for PTC probe).

Resolution: 0.1 °C or 1 °C.

Accuracy: better than 0.5 °C.

Consumption: 0.5 VA.

Power supply: 230 V~ ±10% or 12 V~/⎓ ±10%, 50/60 Hz.

Electrical Diagram

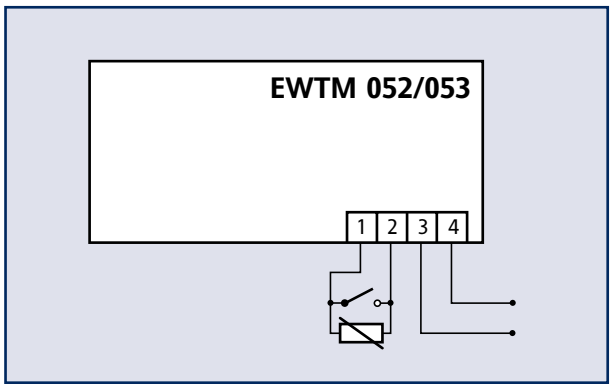

Electrical Diagram Description

1–2	Probe input
3–4	Power supply



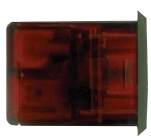

EWTM 101/102/202

electronic digital thermometer



Description

The EWTM 101, 102 and 202 are electronic digital thermometers which can be connected to various types of probes (PTC, Pt100, Ni100, TcJ, TcK); they are available in the 32x74 standard format. The measuring range goes from –80 to 999 °C, according to the type of probe, and temperature values are viewed on a 3–digit plus sign display for EWTM 102 and 202, 2–digit display for EWTM 101.
The power supply voltage is 12 V~/⎓ for EWTM 101 and 102 models, 230, 115, 24 or 12 V~/⎓ for EWTM 202 model.

Technical Data

Container: PC+ABS plastic resin with extinguishing classification UL94 V0.

Size: front panel 32x74 mm, depth 67 mm.

Mounting: panel, on 71x29 mm. hole.

Connections: on screw clamp for 2.5 mm^2 conductors (one conductor only per terminal, according to VDE regulations).

Protection: on request, a shelter (roofing tile) with restrained mounting on the back of the instrument is supplied in order to protect the screw clamp.

Usage temperature: –5...60 °C.

Storage temperature: –30...75 °C.

Display: 2 or 3 digits (depending on model), 12.5 mm high.

Analogue input: for PTC, Pt100, Ni100, TcJ, TcK probe.

Resolution: 1 °C or 0.1 °C (for PTC probe only).

Accuracy: better of the 0.5% than the end of scale.

Power supply: 12 V~/⎓ ±15% for EWTM 101 and 102 models; 30, 115, 24, 12 V~/⎓ ±10% for EWTM 202 model.

Electrical Diagram

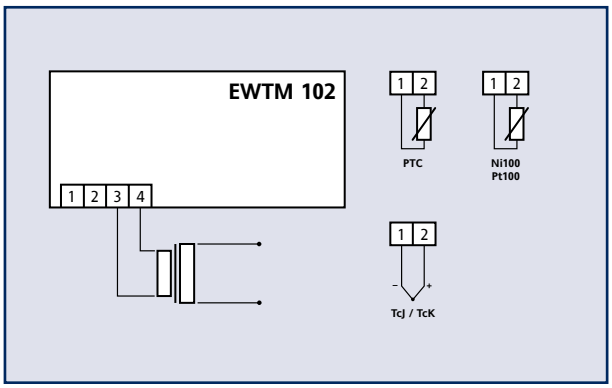

Electrical Diagram Description

1–2	Probe input
3–4	Power supply





EWTL 300

LCD digital thermometer



Description

The EWTL 300 are LCD digital thermometers with a temperature probe linked to the instrument through a 1.5 meter cable.
The measurement range goes from –20 to 70 °C.
Power supply is ensured by a 1.5 V LR 44 battery or equivalent with a 12 months life.

Technical Data

Mounting: –with a panel ≤ 2 mm thick, 45.8x26.4 mm hole
–with a panel ≤ 3.5 mm thick, 46x26.4 mm hole;
–with a panel >3.5 mm thick, 46.2x26.4 mm hole.

Measurement range: –20...70 °C; (0...160 °F).

Resolution: 0.1 °C (0.2 °F), max 0.3 °C (0.4 °F).

Accuracy: ±1 °C (1.8 °F) from 0 to 40 °C (from 32 to 104 °F).

Battery: one (1) battery 1.5 V LR 44 or equivalent.

Battery life: about 12 months.

Viewing update: 10 seconds.

Probe: linked to the instrument, 1.5 m. cable.

Dimensions

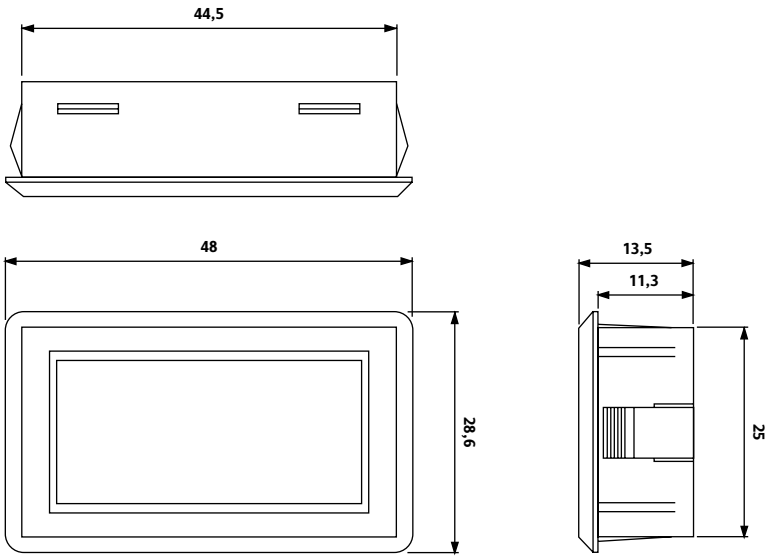



EWTL 310

LCD digital thermometer



Description

The EWTL 310 are LCD digital thermometers with a temperature probe linked to the instrument through a 0.5, 1, 2, or 3 meter cable.
The measurement range goes from –20 to 70 °C.
Power supply is ensured by a 1.5 V LR 44 battery or equivalent with a 12 months life.

Technical Data

Size: front panel 62x30mm, depth 19 mm.

Display: LCD 2 and a half digit.

Measurement range: –20...70 °C.

Resolution: 1°C.

Accuracy: better of the 0.5% than the end of scale.

Power supply: one (1) battery 1.5 V LR 44 or equivalent.

Viewing update: 12 seconds.

Probe: linked to the instrument, choice of 0.5 m, 1 m, 2 m, or 3 m cable.

Dimensions

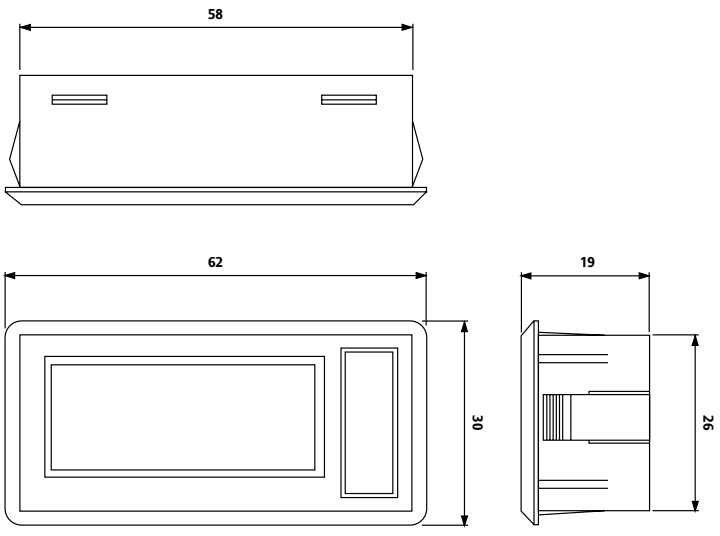



EWMETER 900

temperature, humidity and pressure meter



Description

The EWMETER 900 are electronic indicators which can be used to detect temperature, humidity or pressure.
The instruments have an input ready for use with temperature (PTC, Ni100, TcJ, TcK), humidity (EWHS 280/300/310), or pressure (EWPA 007/030) probes, or with 4...20 mA current.
The EWMETER 900 are supplied in the 72x72 standard format and the power supply voltage is 230 V~.

Technical Data

Container: plastic in PC+ABS, V0 self–estinguishing.

Size: front panel 72x72 mm, depth 102 mm (terminals excluded).

Mounting: panel, on 67x67 mm. hole.

Connections: on screw clamp for 4 mm^2 conductors (one conductor only per terminal for power connections).

Usage temperature: –5...60 °C.

Storage temperature: –30...75 °C.

Usage humidity: 10...90 % non–condensing.

Display: 3 digits plus sign, 12.5 mm high

Analogue input: PTC, RTD (Ni100, Pt100), Tc (J, K) probe, (4...20 mA, Ri = 41Ω) current, EWHS 280/300/310, EWPA 007/030.

Measurement range: according to the probe used.

Resolution: 1 or 0.1 °C, 1 or 0.1% R.H., 1 or 0.1 Bar.

Accuracy: better of the 0.5% than the end of scale.

Consumption: 5 VA max.

Power supply: 230 V~ ±10%, 50/60 Hz.

Electrical Diagram

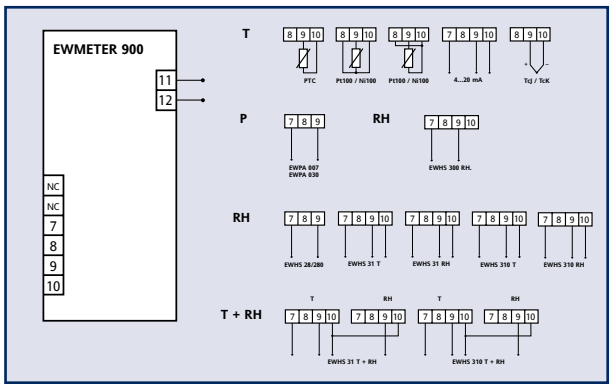

Electrical Diagram Description

7–8–9–10	Probe input
11–12	Power supply



