AN240P

TV Sound IF Amplifier, FM Detector Circuits

■ Description

AN240P is an integrated circuit designed for Sound IF Amp and FM Detector in TV receiver sets.

■ Features

- Sound IF Amplifier
  FM Detector
  DC Volume Control Circuit
  Sound Pre-amplifier
- Differential Peak Detector Circuit
- Operates on 12V Supply

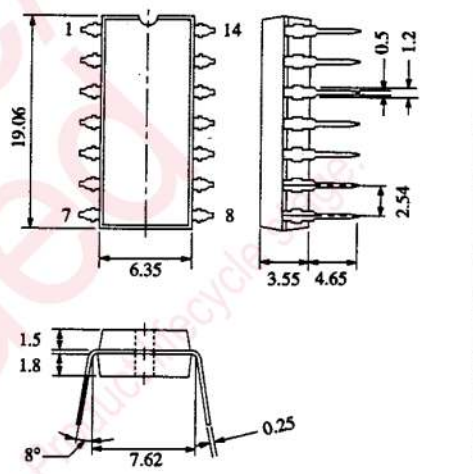

14-Lead DIL Plastic Package

Maintenance/ Discontinued
Maintenance/discontinued includes following four product/cycle types: planed maintenance type, maintenance type, planed discontinued typed, discontinued type. Please visit following URL about latest information. http://www.semicon.panasonic.co.jp/en/

■ Block Diagram

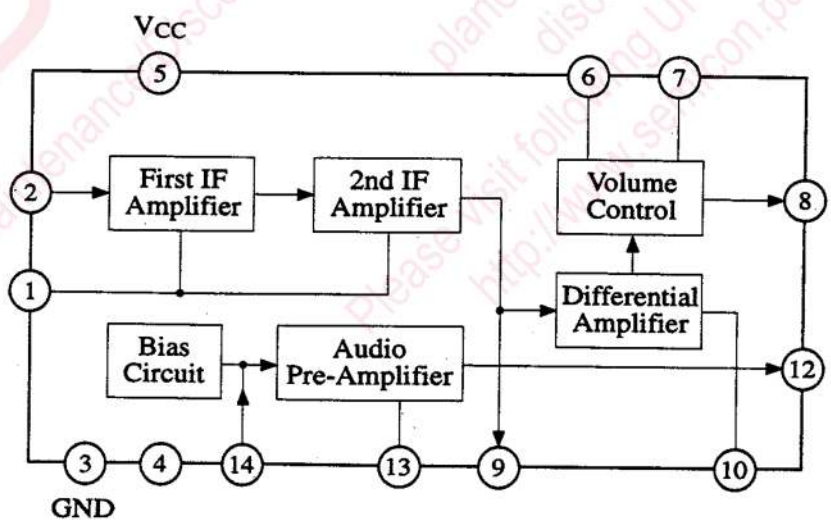

■ Absolute Maximum Ratings (Ta=25°C)

Item		Symbol	Rating		Unit
Supply Voltage		V_{CC}	14.4		V
Voltage		V_{1-3}	5	0	V
		$V_{2-3,\ 10-3}$	4	-5	V
		V_{6-3}	V_{5-3}	-5	V
		V_{7-3}	V_{5-3}	0	V
		V_{9-3}	4	0	V
		V_{14-3}	3	-5	V
Current		$I_{1,\ 2,\ 14}$	1	-0.1	mA
		$I_{6,\ 7,\ 9}$	1	-1	mA
		I_8	0.5	-6	mA
		I_{10}	1	-0.1	mA
		I_{12}	0.5	-6	mA
		I_{13}	1	-2	mA
Supply Current		I_{CC}	50		mA
Power Dissipation (Ta ≤ 70 °C)		P_D	445		mW
Temperature	Operating Ambient Temperature	Topr	-20 ~ +70		°C
	Storage Temperature	Tstg	-40 ~ +150		°C

■ Electrical Characteristics (V_{CC}=V_{5-3}=12V, Ta=25°C)

Item		Symbol	Test Cct.	Condition	min.	typ.	max.	Unit
Total Circuit Current		I_{tot}		Pin 1 - 2 shorted Pin 9 - 10 shorted	17	22.5	27	mA
IF Input Voltage		V_{1-3}				2		V
Volume Control		V_{6-3}				4.8		V
De-emphasis		V_{7-3}				6.1		V
IF Output		V_{9-3}				3.7		V
Audio Output		V_{12-3}			4.3	5.4	6.1	V
Input Limiting Voltage (-3dB)		$V_{i(lim)}$	1	fo=4.5MHz, fm=400Hz, Δf=±25kHz		250	400	μVrms
AM Rejection		AMR	1	fo=4.5MHz, fm=400Hz, Δf=±25kHz AM=400Hz 30%, Vi=100mVrms, Rx=0	40	50		dB
Input Impedance		$R_{i(IF)}$		fo=4.5MHz, Pin 1-2		20		kΩ
Input Impedance		$C_{i(IF)}$		fo=4.5MHz, Pin 1-2		4.7		pF
Output Impedance		$R_{O(IF)}$		fo=4.5MHz, Pin 9-3		3.25		kΩ
Output Impedance		$C_{O(IF)}$		fo=4.5MHz, Pin 9-3		10		pF
Demodulation Output		$V_{O(AF)}$	1	fo=4.5MHz, fm=400Hz, Δf=±25kHz Vi=100mVrms, Rx=0	0.6	0.8	1.2	Vrms
THD (Demod.)		$THD_{(1)}$	1			0.9	2.0	%
Output Resistance Pin 7		R_O		f=400Hz		7.5		kΩ
Output Resistance Pin 8		R_O		f=400Hz		300		Ω
Attenuation (max.)		Att	1	fo=4.5MHz, fm=400Hz, Δf=±25kHz Vi=100mVrms, Rx=∞	60	80		dB
AF Pre-Amp	Gain	$G_{V(AF)}$	2	f=400Hz, Vi=100mVrms	17.5	20	23	dB
	THD	$THD_{(2)}$	2	f=400Hz, Vi=2Vrms		1.5		%
	Output	V_O	2	f=400Hz, THD=5%	2	2.5		Vrms
	Input Resistance	$R_{i(AF)}$		f=400Hz		50		kΩ
	Output Resistance	$R_{O(AF)}$		f=400Hz		270		Ω

Test Circuit 1 ($V_{i(lim)}$, AMR, $V_{O(AF)}$, $THD_{(1)}$, Att)

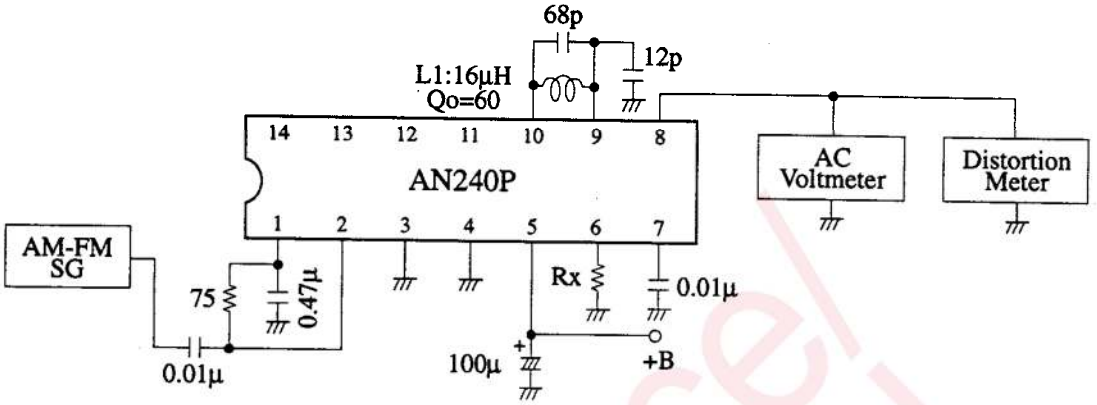

Test Circuit 2 ($G_{V(AF)}$, $THD_{(2)}$, V_O)

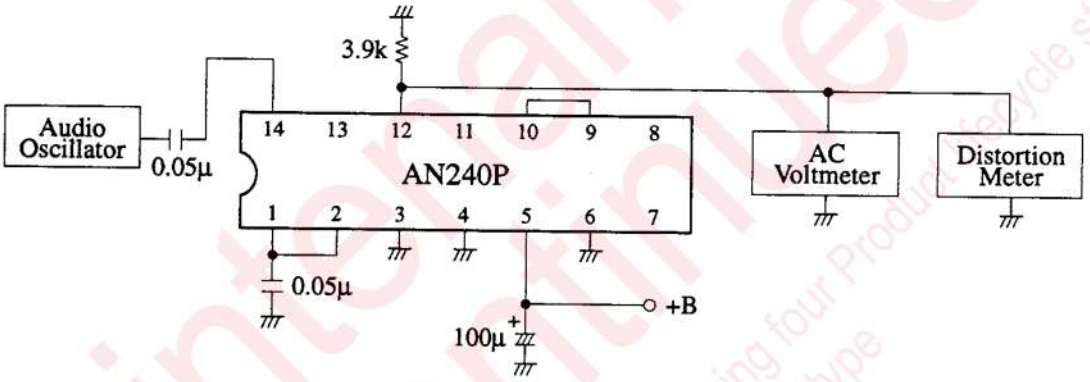

■ Application Circuit

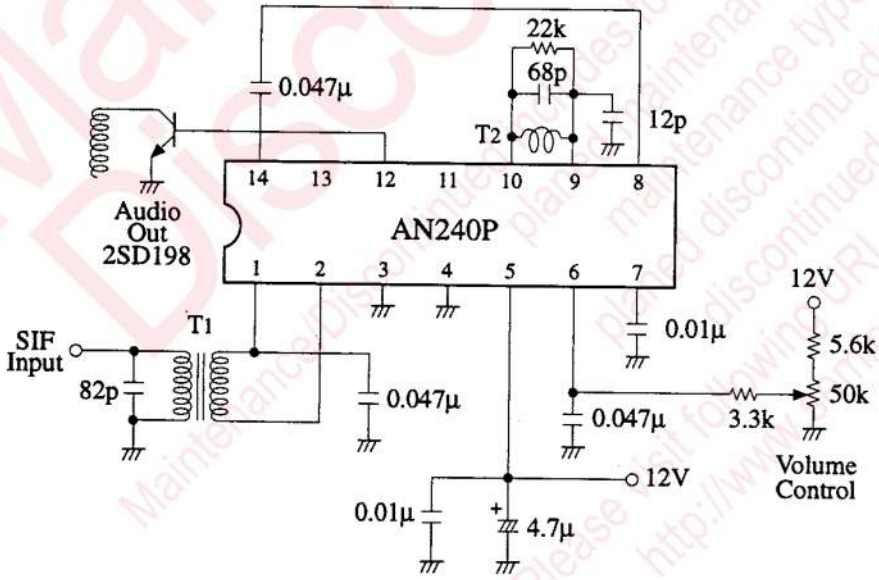

● Coil Specifications

Symbol	Diagram	Turns of coil	Kind of wire	Core
T1	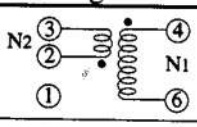	N1 46T	2UEW 0.08	L(④ - ⑥) : 13μH±10%
		N2 6T	2UEW 0.08	
T2	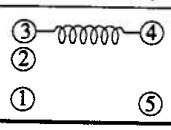	48.5T	2UEW 0.08	L(③ - ④) : 13-8μH±10%

Maintenance/Discontinued
Maintenance/Discontinued includes following four Product Lifecycle stage.
planned maintenance type
maintenance type
planned discontinued typed
discontinued type
Please visit following URL about latest information.
http://www.semicon.panasonic.co.jp/en/

Request for your special attention and precautions in using the technical information and semiconductors described in this book

(1) If any of the products or technical information described in this book is to be exported or provided to non-residents, the laws and regulations of the exporting country, especially, those with regard to security export control, must be observed.

(2) The technical information described in this book is intended only to show the main characteristics and application circuit examples of the products. No license is granted in and to any intellectual property right or other right owned by Panasonic Corporation or any other company. Therefore, no responsibility is assumed by our company as to the infringement upon any such right owned by any other company which may arise as a result of the use of technical information described in this book.

(3) The products described in this book are intended to be used for standard applications or general electronic equipment (such as office equipment, communications equipment, measuring instruments and household appliances).
Consult our sales staff in advance for information on the following applications:
- Special applications (such as for airplanes, aerospace, automobiles, traffic control equipment, combustion equipment, life support systems and safety devices) in which exceptional quality and reliability are required, or if the failure or malfunction of the products may directly jeopardize life or harm the human body.
- Any applications other than the standard applications intended.

(4) The products and product specifications described in this book are subject to change without notice for modification and/or improvement. At the final stage of your design, purchasing, or use of the products, therefore, ask for the most up-to-date Product Standards in advance to make sure that the latest specifications satisfy your requirements.

(5) When designing your equipment, comply with the range of absolute maximum rating and the guaranteed operating conditions (operating power supply voltage and operating environment etc.). Especially, please be careful not to exceed the range of absolute maximum rating on the transient state, such as power-on, power-off and mode-switching. Otherwise, we will not be liable for any defect which may arise later in your equipment.
Even when the products are used within the guaranteed values, take into the consideration of incidence of break down and failure mode, possible to occur to semiconductor products. Measures on the systems such as redundant design, arresting the spread of fire or preventing glitch are recommended in order to prevent physical injury, fire, social damages, for example, by using the products.

(6) Comply with the instructions for use in order to prevent breakdown and characteristics change due to external factors (ESD, EOS, thermal stress and mechanical stress) at the time of handling, mounting or at customer's process. When using products for which damp-proof packing is required, satisfy the conditions, such as shelf life and the elapsed time since first opening the packages.

(7) This book may be not reprinted or reproduced whether wholly or partially, without the prior written permission of our company.

20080805

Maintenance/Discontinued includes following types
Please visit following URL about latest information
http://www.semicon.panasonic.co.jp/en/