Powerex, Inc., 200 E. Hillis Street, Youngwood, Pennsylvania 15697-1800 (724) 925-7272

Intellimod™ Module

Application Specific IPM
50 Amperes/600 Volts

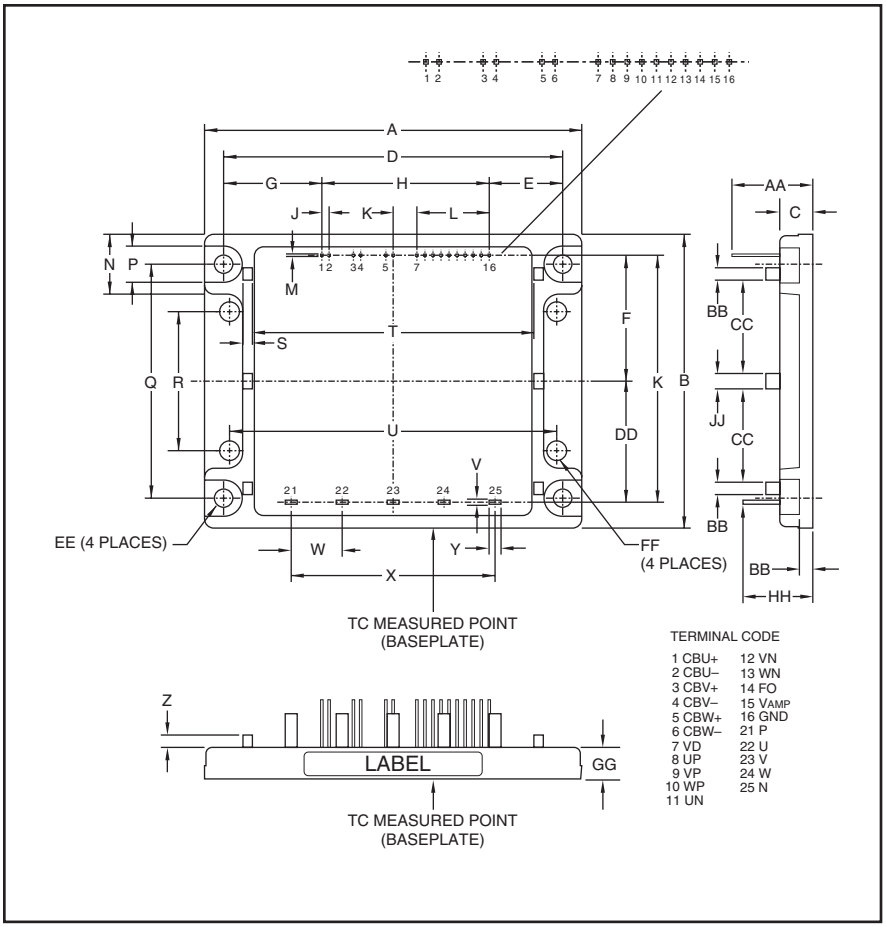

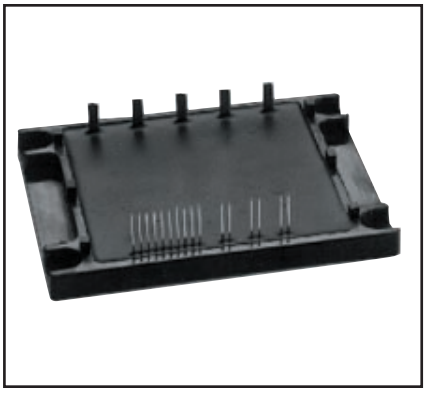

Description:
Powerex Application Specific IPMs (ASIPMs) are inteligent power modules that integrate power devices, gate drive and protection circuitry in a compact package for use in small inverter applications up to 20kHz. Use of application specific HVICs allow the designer to reduce inverter size and overall design time.

Features:
- ☐ Compact Packages
- ☐ 3-phase Converter Bridge Built-in
- ☐ Integrated HVICs
- ☐ Direct Connection to DSP/CPU

Applications:
- ☐ Small Motor Control
- ☐ Small Servo Motors
- ☐ General Purpose Inverters
- ☐ Pump and HVAC Motor Control

Ordering Information:
PS11037 is a 600V, 50 Ampere Application Specific Intelligent Power Module.

Outline Drawing and Circuit Diagram

Dimensions	Inches	Millimeters
A	3.74±0.04	95.0±1.0
B	2.91±0.04	74.0±1.0
C	0.32±0.02	8.0±0.5
D	3.35±0.01	85.0±0.3
E	0.73	18.5
F	1.25	31.65
G	0.97	24.5
H	1.65	42.0
J	0.08	2.0
K	0.24	6.0
L	0.71	18.0
M	12.7 SQ.	0.5 SQ.
N	0.59	15.0
P	0.35	9.0
Q	2.32±0.01	59.0±0.3
R	1.38	35.0
S	0.10	2.5

Dimensions	Inches	Millimeters
T	2.80	71.0
U	3.23	82.1
V	0.04	1.0
W	0.50±0.01	12.7±0.3
X	2.00±0.03	50.8±0.8
Y	0.12	3.0
Z	0.14	3.5
AA	0.80±0.04	20.4±1.0
BB	0.12	3.0
CC	0.93	23.5
DD	1.21±0.02	30.7±0.5
EE	0.181 DIA.	4.6 DIA.
FF	0.197 DIA.	5.0 DIA.
GG	0.31±0.02	8.0±0.5
HH	0.67±0.03	17.0±0.8
JJ	0.16	4.0
KK	2.45±0.03	62.35±0.8

PS11037
Intellimod™ Module
Application Specific IPM
50 Amperes/600 Volts

Absolute Maximum Ratings, T_j = 25°C unless otherwise specified

Characteristics	Symbol	PS11037	Units
Power Device Junction Temperature*	T_j	-20 to 125	°C
Storage Temperature	T_{stg}	-40 to 125	°C
Case Operating Temperature (See T_C Measure Point Illustration)	T_C	-20 to 100	°C
Mounting Torque, M4 Mounting Screws	—	13	in-lb
Module Weight (Typical)	—	108	Grams
Isolation Voltage**	V_{ISO}	2500	Volts

*The indicated values are specified considering the safe operation of all the parts within the ASIPM. The maximum rating for the ASIPM power chips (IGBT & FWDi) is T_j < 150.
**60 Hz sinusoidal AC applied between all terminals and the base plate for 1 minute.

IGBT Inverter Sector

Supply Voltage (Applied between P - N)	V_{CC}	450	Volts
Supply Voltage, Surge (Applied between P - N, Surge-Value)	$V_{CC(surge)}$	500	Volts
Each IGBT Collector-Emitter Static Voltage (Applied between P-U·V·W, U·V·W-N)	V_P or V_N	600	Volts
Each IGBT Collector-Emitter Switching Voltage (Applied between P-U·V·W, U·V·W-N (Pulse))	$V_{P(S)}$ or $V_{N(S)}$	600	Volts
Each IGBT Collector Current, T_C = 25°C, "( )" means I_C Peak Value	$\pm I_C$ ($\pm I_{CP}$)	±50 (±100)	Amperes

Control Sector

Supply Voltage	V_D, V_{DB}	-0.5 ~ 20	Volts
Input Signal Voltage	V_{CIN}	-0.5 ~ 7.5	Volts
Fault Output Supply Voltage	V_{FO}	-0.5 ~ 7.5	Volts
Fault Output Current	I_{FO}	15	mA
DC-link IGBT Current Signal Amp Output Current	I_{AMP}	1	mA

Electrical and Mechanical Characteristics, T_j = 25°C unless otherwise specified

Characteristics	Symbol	Test Conditions	Min.	Typ.	Max.	Units
IGBT Inverter Sector						
Collector-Emitter Saturation Voltage	$V_{CE(sat)}$	I_C = 50A, T_j = 25°C, $V_D = V_{DB}$ = 15V, Input = ON (Shunt Voltage Drop Not Included)	—	—	2.9	Volts
Diode Forward Voltage	V_{EC}	T_j = 25°C, $-I_C$ = 50A	—	—	2.9	Volts
Switching Times	t_{on}	1/2 Bridge Inductive, Input = 5V ↔ 0V,	0.3	0.6	1.5	µS
	$t_{C(on)}$	V_{CC} = 300V, I_C = 50A, T_j = 125°C,	—	0.5	1.0	µS
	t_{off}	V_D = 15V, V_{DB} = 15V	—	1.6	2.5	µS
	$t_{C(off)}$	Note: t_{on}, t_{off} include delay time of	—	0.5	1.2	µS
FWDi Reverse Recovery Time	t_{rr}	the internal control circuit.	—	0.12	—	µS
Short-circuit Endurance (Output, Arm, and Load Short-circuit Modes)		@V_{CC} ≤ 400V, Input = 5V → 0V (One-shot), -20°C ≤ $T_{j(start)}$ ≤ 125°C, 13.5V ≤ $V_D = V_{DB}$ ≤ 16.5V	• No Destruction • F_O Output by Protection Operation			
Switching SOA		@V_{CC} ≤ 400V, Input = 5V → 0V, T_j ≤ 125°C, I_C < OC Trip Level, 13.5V ≤ $V_D = V_{DB}$ ≤ 16.5V	• No Destruction • No Protecting Operation • No F_O Output			

T_C Measure Point

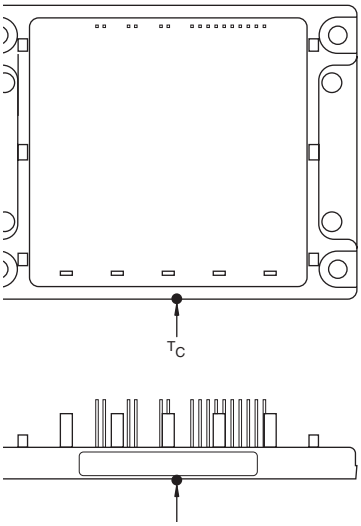

Electrical and Mechanical Characteristics, T_j = 25°C unless otherwise specified

Characteristics	Symbol	Test Conditions	Min.	Typ.	Max.	Units
Control Sector						
Circuit Current (Average)	I_D	T_j = 25°C, V_D = 15V, V_{IN} = 5V	—	—	50	mA
	I_{DB}	T_j = 25°C, V_D = V_{DB} = 15V, V_{IN} = 5V	—	—	5	mA
Input ON Threshold Voltage	$V_{th(on)}$		0.8	1.4	2.0	Volts
Input OFF Threshold Voltage	$V_{th(off)}$		2.5	3.0	4.0	Volts
Input Pull-up Resistor	Ri	Applied between Input Terminal-inside Power Supply	—	50	—	kΩ
PWM Input Frequency	f_{PWM}	T_C ≤ 100°C, T_j ≤ 125°C	—	10	15	kHz
Arm Shoot-through Blocking Time*	t_{DEAD}	Relates to Corresponding Inputs T_C = -20°C ~ 100°C	2.2	—	—	µS
Input Interlock Sensing	t_{int}	Relates to Corresponding Input	—	100	—	ns
Inverter DC-link IGBT Current	V_{amp} 100%	I_C = $I_{OP(100\%)}$, V_D = 15V, T_j = 25°C	1.5	2.0	2.5	Volts
Sense Voltage Output Signal**	V_{amp} 200%	I_C = $I_{OP(200\%)}$, V_D = 15V, T_j = 25°C	3.0	4.0	5.0	Volts
Inverter DC-link IGBT Current	V_{amp} 250%	I_C = $I_{OP(250\%)}$, V_D = 15V	5.0	—	—	Volts
Sense Voltage Output Limit**	V_{amp} 0%	I_C = $I_{OP(0\%)}$, V_D = 15V	—	50	100	mV
Over-current Trip Level	OC	T_j = 25°C	86.7	102	117	Amperes
Over-current Delay Time	t_{OC}		—	10	—	µS
Short-circuit Trip Level	SC		—	181	—	Amperes
Short-circuit Delay Time	t_{SC}		—	2	—	µs
Supply Circuit Under-voltage Protection — Trip Level	UV_D	T_C = T_j = 25°C	11.0	12.0	12.75	Volts
Supply Circuit Under-voltage Protection — Reset Level	UV_{Dr}		11.5	12.5	13.5	Volts
Supply Circuit Under-voltage Protection — Trip Level	UV_{DB}		10.1	10.8	11.6	Volts
Supply Circuit Under-voltage Protection — Reset Level	UV_{DBr}		10.6	11.3	12.1	Volts
Supply Circuit Under-voltage Protection — Delay Time	t_{dV}		—	10	—	µS
Fault Output Pulse Width***	t_{FO}	T_j = 25°C	1.0	1.8	—	mS
Fault Output Current***	$I_{Fo(H)}$	Open Collector Output	—	—	1	µA
	$I_{Fo(L)}$		—	—	15	mA

* The dead-time has to be set externally by the CPU; it is not part of the ASIPM internal functions.
**Refer to the graph on next page.
***Fault output signalling is given only when the internal OC, SC, and UV protection circuits are activated. The OC, SC and UV protection (and fault output) operate for the lower arms only. The OC and SC protection fault output is given in a pulse format while that of UV protection is maintained throughout the duration of the under-voltage condition.

PS11037
Intellimod™ Module
Application Specific IPM
50 Amperes/600 Volts

Thermal Characteristics

Characteristic	Symbol	Condition	Min.	Typ.	Max.	Units
Junction to Case	$R_{th(j-c)Q}$	Each IGBT	—	—	1.75	°C/Watt
	$R_{th(j-c)D}$	Each FWDi	—	—	2.4	°C/Watt
Contact Thermal Resistance	$R_{th(c-f)}$	Case to Fin Per Module. Thermal Grease Applied	—	—	0.031	°C/Watt

Recommended Conditions for Use

Characteristic	Symbol	Condition	Min.	Typ.	Value	Units
Supply Voltage	V_{CC}	Applied across P-N Terminals	—	300	400	Volts
Control Supply Voltage	V_D	Applied between V_D-GND	13.5	15.0	16.5	Volts
	V_{DB}	Applied between CBU+ & CBU-, CBV+ & CBV-, CBW+ & CBW-	13.5	15.0	16.5	Volts
Control Supply dv/dt	dV_D/dt, dV_{DB}/dt		-1	—	1	V/µs
Input ON Voltage	$V_{CIN(on)}$	Applied between U_P, V_P, W_P, U_N, V_N, W_N-GND	0	—	0.8	Volts
Input OFF Voltage	$V_{CIN(off)}$		4.0	—	5.0	Volts
Module Case Operating Temperature	T_C		—	—	100	°C
PWM Input Frequency	f_{PWM}	$T_C \leq 100°C$, $T_j \leq 125°C$	—	—	15	kHz
Allowable Minimum Input On-pulse Width	t_{XX}		1	—	—	µS
Arm Shoot-through Blocking Time	t_{DEAD}	Relate to Corresponding Inputs	2.2	—	—	µS

INVERTER DC-LINK IGBT CURRENT ANALOG SIGNALING (TYPICAL)

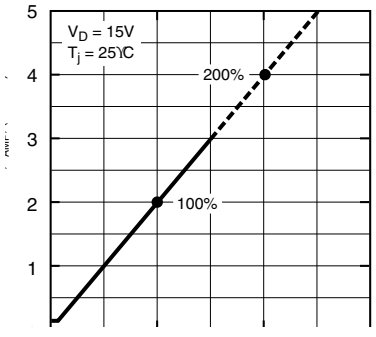

PS11037
Intellimod™ Module
Application Specific IPM
50 Amperes/600 Volts

Functional Block Diagram

