SEP 27 1988 SEMJ

T-25-15
T-25-17

SanRex®
POWER SEMICONDUCTORS

NEW

ISOLATED TRIAC MOLD TYPE
TG SERIES

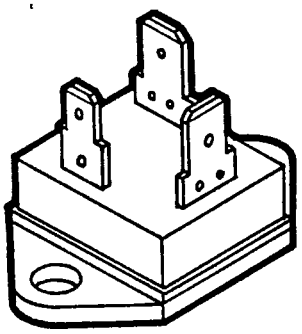

- TO-3 Isolated Mounting. 2.5kV RMS Isolation
- Voltage Range Up to 600V
- High Commutating dv/dt

TG-F SERIES

- Super High Surge Current Capability
- Economical Low On-State Voltage

Parts Number Asignment

TG 25 F 40

TG Series

RMS ON-STATE CURRENT

Type Code

C	Standard Type Gate Terminal Thickness 0.5mm (0.020in)
E	Standard Type Gate Terminal Thickness 0.8mm (0.031in)
F	High Quality Type Gate Terminal Thickness 0.8mm (0.031in)

Voltage Code	V_{DRM} [V]
20	200
30	300
40	400
50	500
60	600

SANSHA ELECTRIC MFG. CO., LTD.
OSAKA JAPAN

8002-5838 Editor

SanRex. POWER SEMICONDUCTORS

T-25-17

MAXIMUM RATINGS

Specifications		Unit	TG16C TG16E	TG25C TG25E
V_{DRM}	Repetitive Peak Voltage Range	V	200~600	200~600
$I_{T(RMS)}$	RMS On-State Current	A	16 Tc=83℃	25 Tc=74℃
I_{TSM}	Surge On-State Current	A	140/160	220/250
I^2t	I^2t for Fusing	A^2S	106	260
P_{GM}	Peak Gate Power Dissipation	W	10	10
$P_{G(AV)}$	Average Gate Dissipation	W	1	1
I_{GM}	Peak Gate Current	A	3	3
V_{GM}	Peak Gate Voltage	V	10	10
di/dt	Critical Rate of Current Rise	A/μS	50	50
Tj	Operating Junction Temperature	℃	−40 +125	−40 +125
T_{stg}	Storage Temperature	℃	−40 +125	−40 +125
V_{ISO}	Isolation Voltage (RMS)	V	2,500	2,500
R_{ISO}	Isolation Resistance	MΩ	1,000	1,000
	Mounting Torque	kgf·cm	12	12
	Weight	g	27	27

ELECTRICAL CHARACTERISTICS

I_{DRM}	Max. Leakage Current		mA	3	5
V_{TM}	Max. On-State Voltage		V	1.5	1.4
I_{GT}	Max. Required Gate Current	1:I^+_{GT1}	mA	50	50
		2:I^-_{GT1}	mA	50	50
		3:I^+_{GT3}	mA	—	—
		4:I^-_{GT3}	mA	50	50
V_{GT}	Max. Required Gate Voltage	1:V^+_{GT1}	V	3	3
		2:V^-_{GT1}	V	3	3
		3:V^+_{GT3}	V	—	—
		4:V^-_{GT3}	V	3	3
V_{GD}	Min. Non-Trigger Gate Voltage		V	0.2	0.2
t_{gt}	Max. Turn On Time		μS	10	10
dv/dt	Min. Critical Rate of Voltage Rise		V/μS	50	50
[dv/dt]c	Min. Commutating dv/dt		V/μS	6	6
I_H	Typ. Holding Current		mA	30	30
R_{th}	Max. Thermal Resistance		℃/W	2.0	1.6

SanRex® POWER SEMICONDUCTORS

T-25-17

TG25F	TG35C TG35E	TG35F	Conditions
400~600	200~600	400~600	
25 Tc=80℃	35 Tc=58℃	35 Tc=67℃	Full cycle current
270/300	300/330	310/340	Non-repetitive, One cycle 50/60Hz
360	450	485	t=2 to 10 msec.
10	10	10	
1	1	1	
3	3	3	
10	10	10	
50	50	50	Tj=25℃, I_G=100mA, V_D=1/2V_{DRM}, di_G/dt=1A/μS
−40 +125	−40 +125	−40 +125	
−40 +125	−40 +125	−40 +125	
2,500	2,500	2,500	AC, 1 minute
1,000	1,000	1,000	DC 1,000 V, 5 sec.
12	12	12	Recommended 10 kgf·cm (9 1b·in)
27	27	27	

3	5	3	Tj=125℃, at V_{DRM}
1.35	1.4	1.38	Tj=25℃, I_T=1.4 $I_{T(RMS)}$
50	50	50	Tj=25℃, I_T=1A, V_D=6V
50	50	50	
—	—	—	
50	50	50	
2.5	3	2.5	Tj=25℃, I_T=1A, V_D=6V
2.5	3	2.5	
—	—	—	
2.5	3	2.5	
0.2	0.2	0.2	Tj=125℃, V_D=1/2V_{DRM}
10	10	10	Tj=25℃, I_T Rated, I_G=100mA, V_D=1/2V_{DRM}
100	20	100	Tj=125℃, V_D=2/3V_{DRM}, Exponential wave
10	3	10	$[di/dt]_C = {}^{8\,(TG16)}_{15\,(TG25,35)}$A/mS, V_D=2/3V_{DRM}
30	30	30	Tj=25℃
1.5	1.5	1.5	Junction to case

TG SERIES

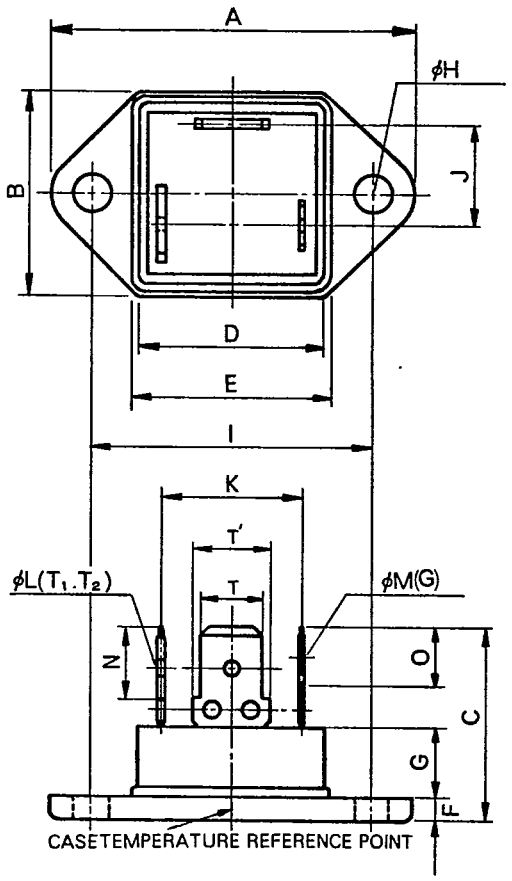

T_1 : TAB250[T=6.35(0.250), T'=8.25(0.325), t=0.8(0.031)]
T_2 : TAB250[T=6.35(0.250), T'=8.25(0.325), t=0.8(0.031)]
G(Ctype) : TAB187[T=4.75(0.187), T'=5.7(0.224), t=0.5(0.020)]
G(E,Ftype) : TAB187[T=4.75(0.187), T'=5.7(0.224), t=0.8(0.031)]
mm(inch)

SYMBOL	INCHES		MILLIMETERS	
	MIN.	MAX.	MIN.	MAX.
A	——	1.543	——	39.20
B	——	0.906	——	23.00
C	——	0.886	——	22.50
D	——	0.791	——	20.10
E	——	0.850	——	21.60
F	0.091	0.114	2.30	2.90
G	——	0.323	——	8.20
φH	0.161	0.169	4.10	4.30

SYMBOL	INCHES		MILLIMETERS	
	MIN.	MAX.	MIN.	MAX.
I	1.177	1.185	29.90	30.10
J	0.415	0.427	10.55	10.85
K	0.545	0.557	13.85	14.15
φL	0.065	0.087	1.65	2.20
φM	0.051	0.062	1.30	1.57
N	0.307	0.319	7.80	8.10
O	0.244	0.256	6.20	6.50

SanRex® DIMENSIONS

T-91-20

DIMENSIONS

IT IS FOR YOUR REFERENCE.
PLEASE SEE INDIVIDUAL CATALOG OR SPECIFICATIONS FOR FURTHER DETAILS.

1
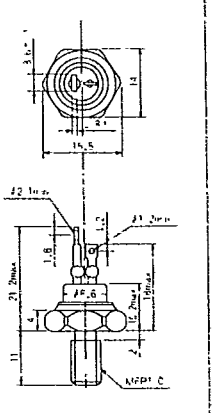

2
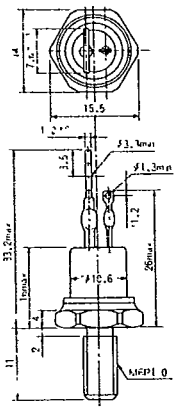

3
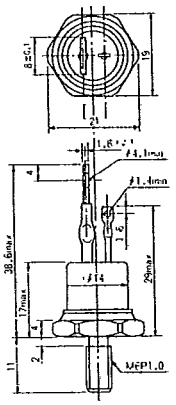

4
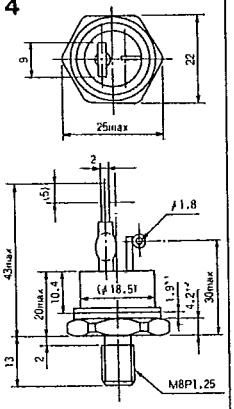

5
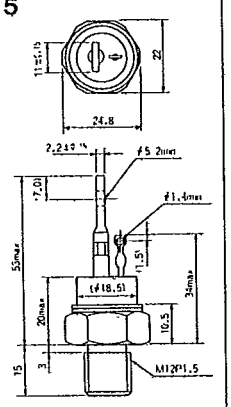

6
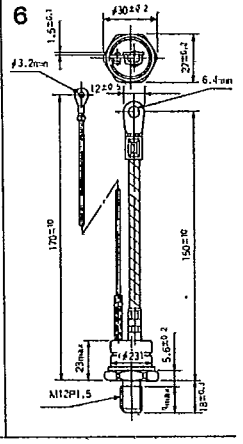

7
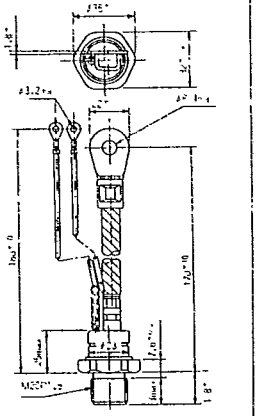

8
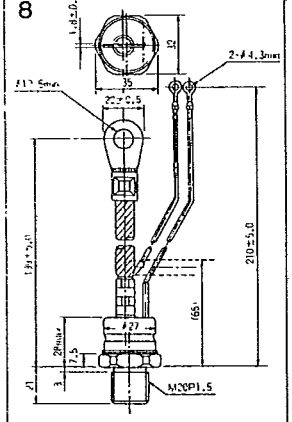

9
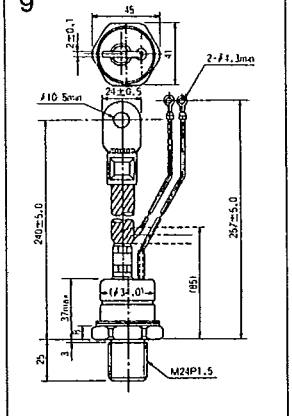

10
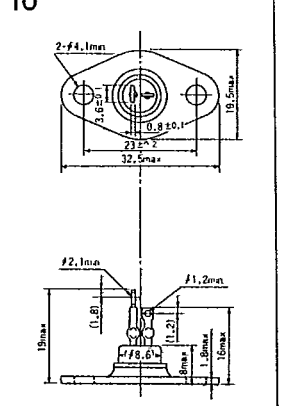

11
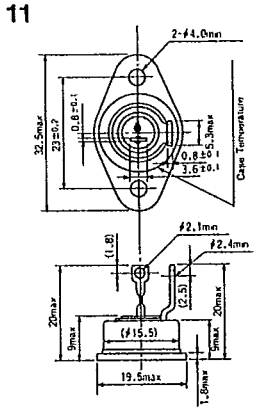

12
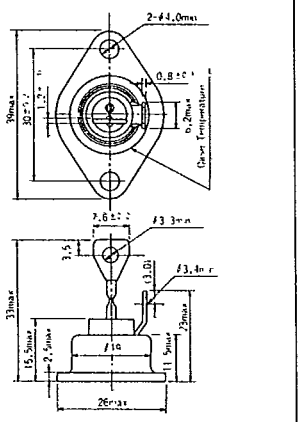

13
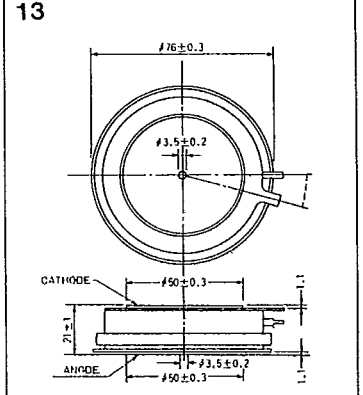

14
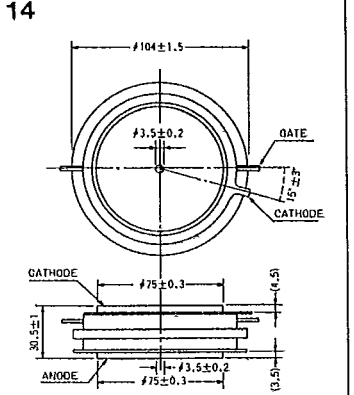

15
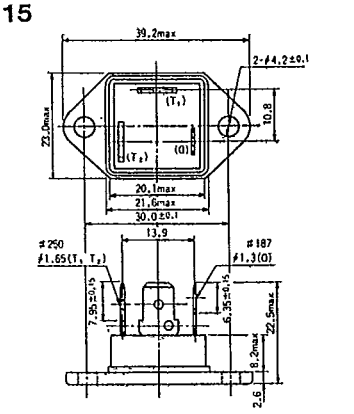

16
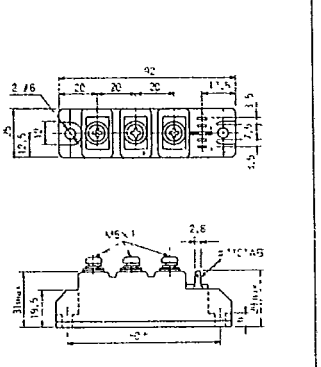

17
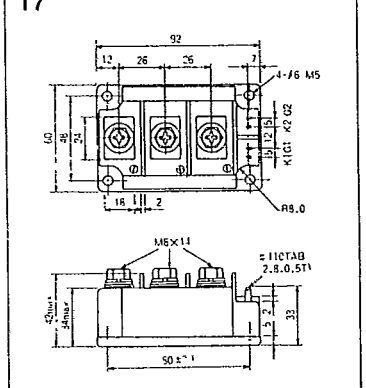

18
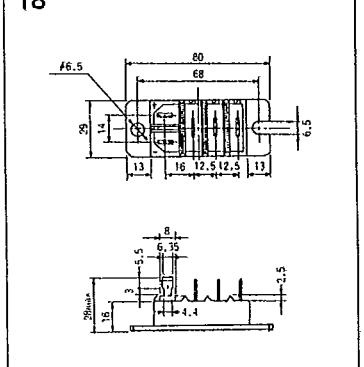

19
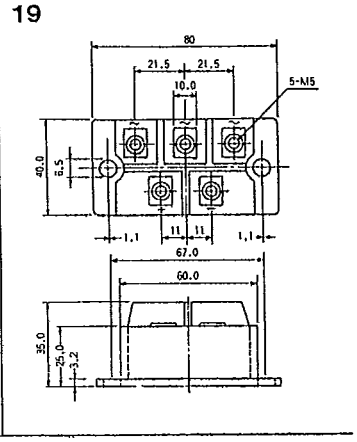

SanRex®

DIMENSIONS

DIMENSIONS

(m/m)

20

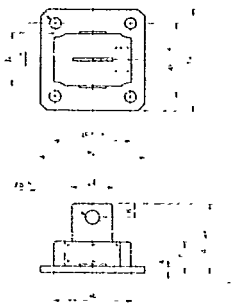

21

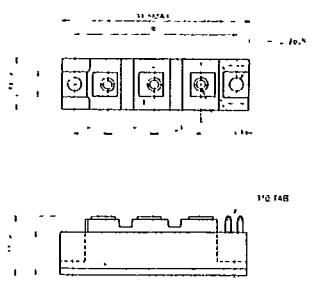

22

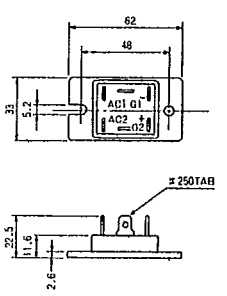

23

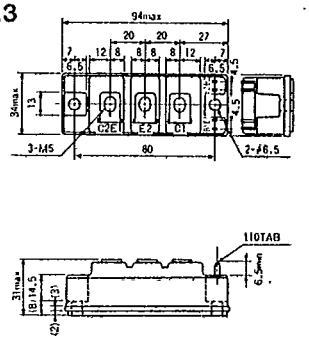

24

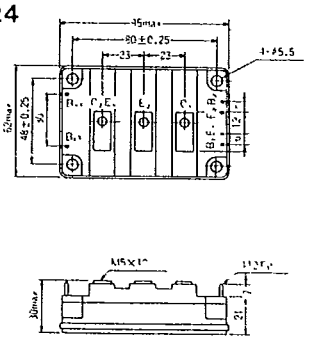

25

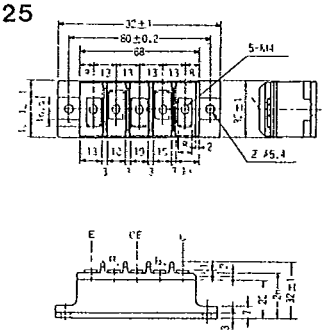

26

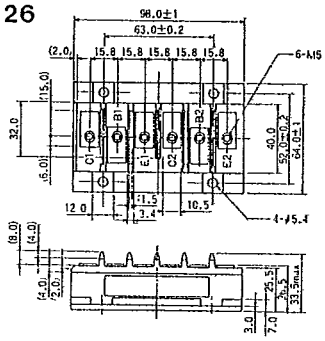

27

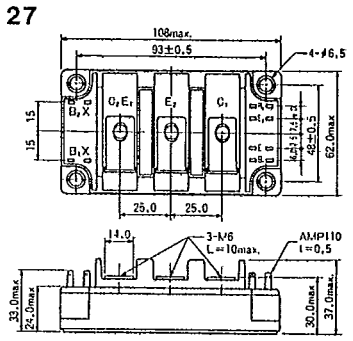

28

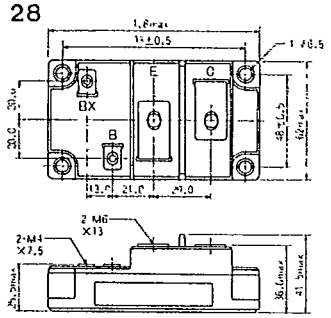

29

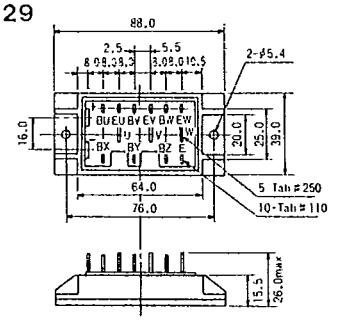

30

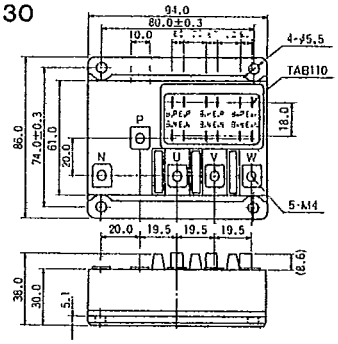

31

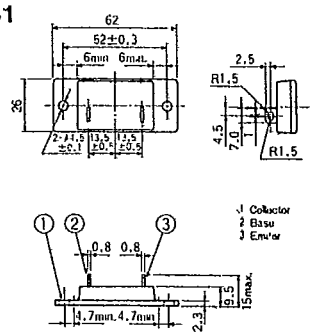

32

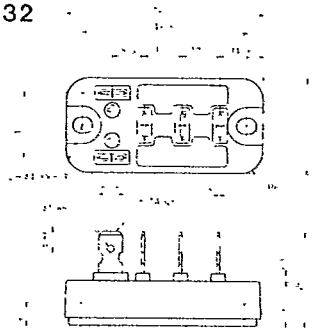

33

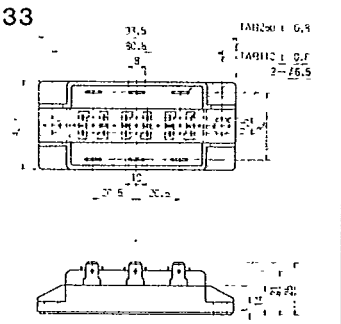

34

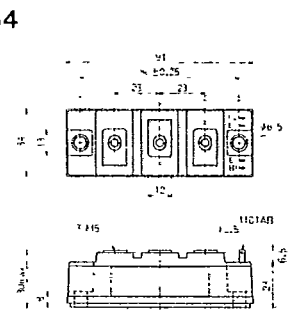

35

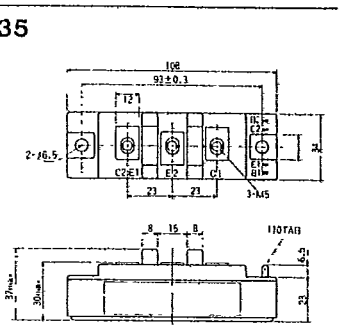

36

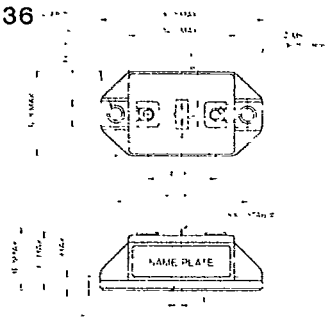

37

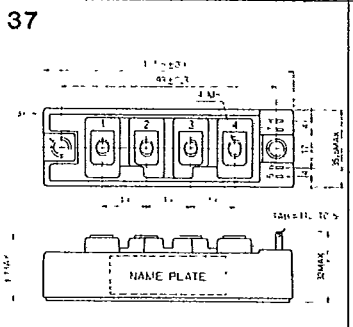

38

