FUJI ELECTRIC

6MBI 75L-060

6-Pack IGBT
600 V
75 A

IGBT MODULE (L series)

■ Features

- High Speed Switching
- Low Saturation Voltage
- Voltage Drive

■ Applications

- Inverter for Motor Drive
- AC and DC Servo Drive Amplifier
- Uninterruptible Power Supply
- Industrial Machines, such as Welding Machines

■ Outline Drawings

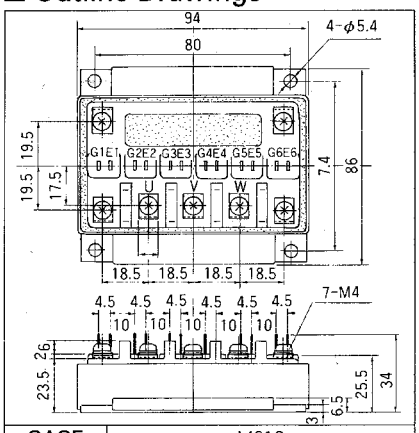

CASE	M616
UL	—

■ Maximum Ratings and Characteristics

● Absolute Maximum Ratings

Items		Symbols	Ratings	Units
Collecter-Emitter Voltage		V_{CES}	600	V
Gate-Emitter Voltage		V_{GES}	±20	V
Collecter Current	Continuous	I_C	75	A
	1ms	$I_{C\ pulse}$	150	
	Continuous	$-I_C$	75	
	1ms	$-I_{C\ pulse}$	150	
Max. Power Dissipation		P_C	325	W
Operating Temperature		T_j	+150	°C
Storage Temperature		T_{stg}	–40 to +125	°C
Net. Weight			510	g
Isolation Voltage	AC. 1min.	V_{isol}	2500	V
Screw Torque		Mounting *1	35	kg•cm
		Terminals *2	17	

*1 Recommendable Value 25 to 35kg•cm (M5)
*2 Recommendable Value 13 to 17kg•cm (M4)

■ Equilavelent Circuit Schematic

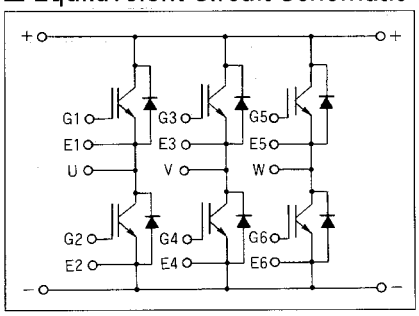

● Electrical Characteristics (Tj=25°C)

Items	Symbols	Test Conditions	Min.	Typ.	Max.	Units
Zero Gate Voltage Collecter Current	I_{CES}	V_{GE}=0V V_{CE}=600V T_j=25°C			1.0	mA
Gate-Emitter Leackage Current	I_{GES}	V_{CE}=0V V_{GE}=±20V			100	nA
Gate-Emitter Threshold Voltage	$V_{GE\ (th)}$	V_{CE}=20V I_C=75mA	3.0		6.0	V
Collecter-Emitter Saturation Voltage	$V_{CE\ (sat)}$	V_{GE}=15V I_C=75A		2.7	3.5	V
Input Capacitance	C_{ies}	V_{GE}=0V		7100		pF
Output Capacitance	C_{oes}	V_{CE}=10V		–		
Reverse Transfer Capacitance	C_{res}	f=1MHz		–		
Turn-on Time *3	t_{on}	V_{CC}=300V		0.4	0.8	μs
	t_r	I_C=75A		0.3	0.6	
Turn-off Time *4	t_{off}	V_{GE}=±15V		0.6	1.0	
	t_f	R_G=33Ω		0.2	0.35	
Diode Forward On-Voltage	V_F	I_F=75A V_{GE}=0V			2.5	V
Reverse Recovery Time	t_{rr}	I_F=75A –di/dt=225A/μs V_{GE}=–10V			300	ns

*3 Resistive load *4 Inductive load

● Thermal Characteristics

Items	Symbols	Test Conditions	Min.	Typ.	Max.	Units
Thermal Resistance	$R_{th\ (j-c)}$	IGBT			0.385	°C/W
	$R_{th\ (j-c)}$	Diode			0.85	
	$R_{th\ (c-f)}$	With Thermal compound		0.05		

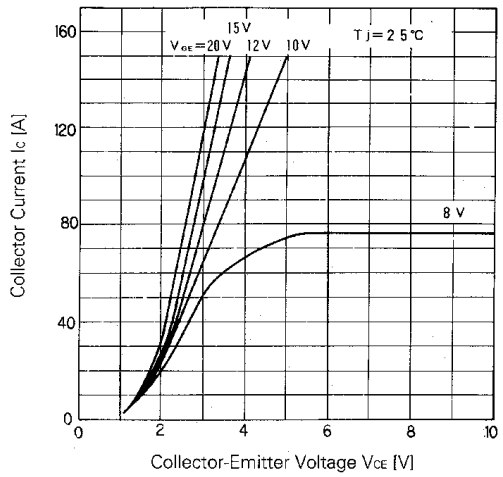

Collector Current vs. Collector-Emitter Voltage

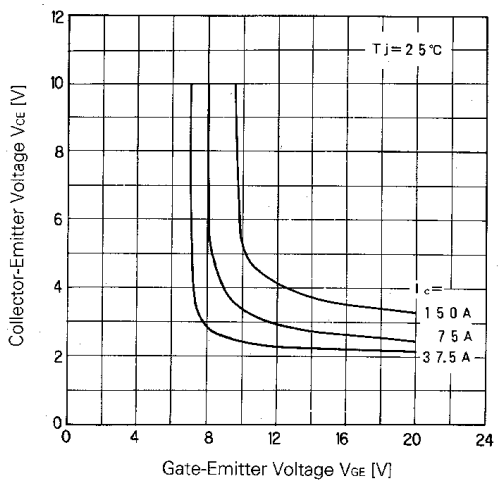

Collector-Emitter Voltage vs. Gate-Emitter Voltage

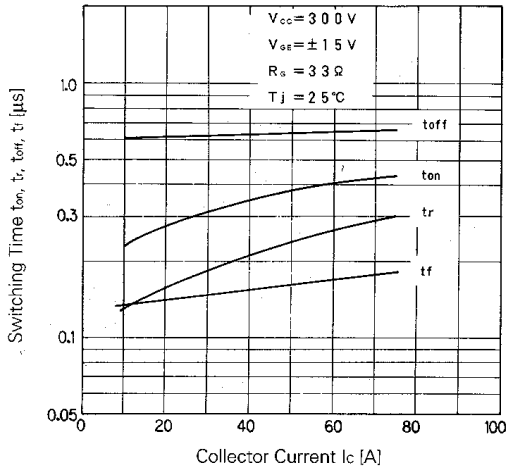

Switching Time

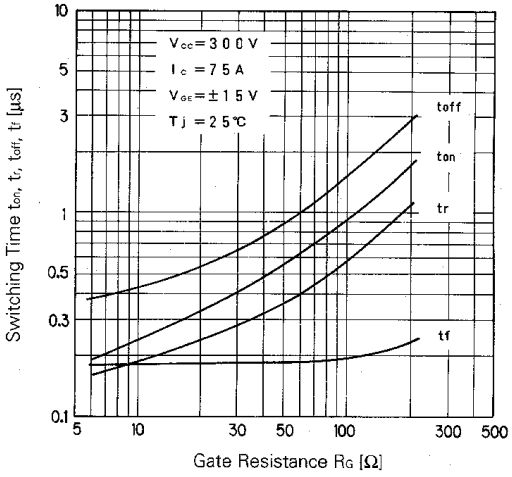

Switching Time-Gate Resistance

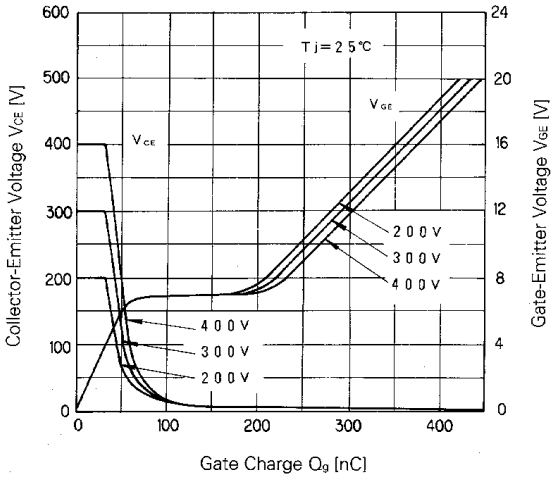

Dynamic Input Characteristic

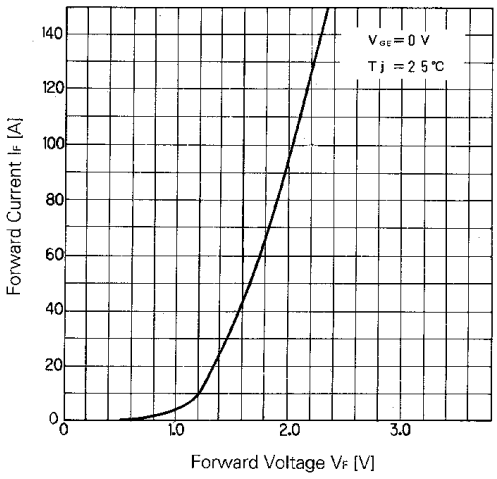

Forward Voltage of Free Wheel Diode

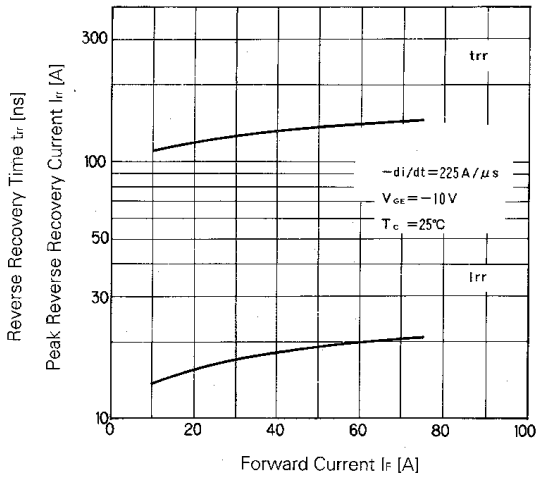

trr, Irr-IF

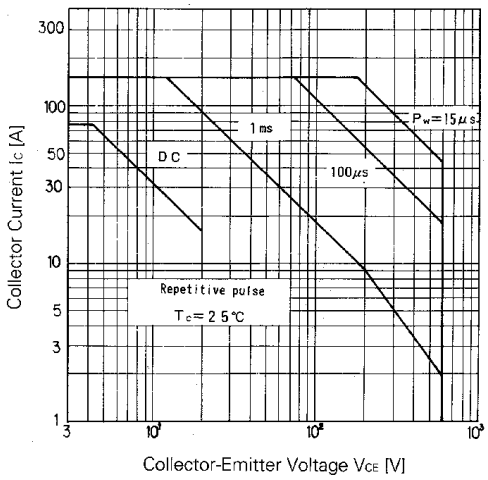

Safe Operating Area

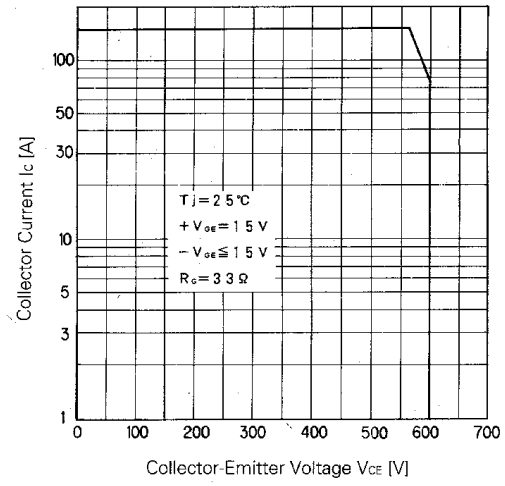

Reverse Biased Safe Operating Area

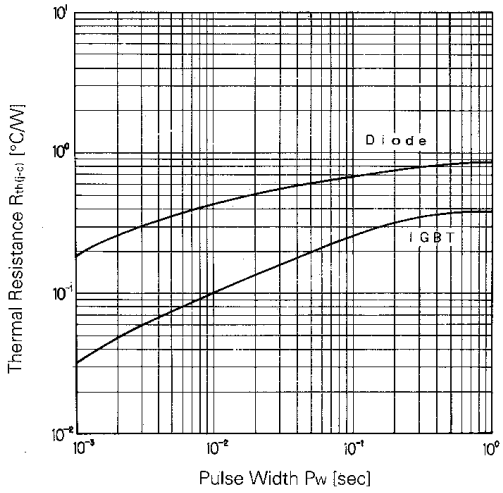

Transient Thermal Resistance

For more information, contact:

Collmer Semiconductor, Inc.
P.O. Box 702708
Dallas, TX 75370
972-733-1700
972-381-9991 Fax
http://www.collmer.com

This datasheet has been download from:

www.datasheetcatalog.com

Datasheets for electronics components.