# SKD 51




| $V_{RSM}$ V | $V_{RRM}$, $V_{DRM}$ V | $I_D$ = 50[1] A (full conduction) ($T_c$ = 127 °C) |
|---|---|---|
| 500 | 400 | SKD 51/04 |
| 900 | 800 | SKD 51/08 |
| 1300 | 1200 | SKD 51/12 |
| 1500 | 1400 | SKD 51/14 |
| 1700 | 1600 | SKD 51/16 |
| 1900 | 1800 | SKD 51/18 |

## Power Bridge Rectifiers

**SKD 51**

### Features

- Glass passivated silicon chips
- Fast-on terminals for pcb solder or plug on connections
- Sturdy insulated metal base plate
- Low thermal impedance through use of direct copper bonded aluminum substrate
- Blocking voltage up to 1800V
- High surge currents
- UL recognized, file no. E63 532

### Typical Applications*

- Three phase rectifier for power supplies
- Input rectifier for variable frequency drives
- Rectifier for DC motor field supplies
- Battery charger rectifiers
- Recommended snubber network: RC: 0.1 µF, 50 Ω ($P_R$ = 1 W)

1) For solder connection. Permissible current for plug connection see DIN IEC 760E and DIN 46249 part 1
2) Freely suspended or mounted on an insulator
3) Mounted on a painted metal sheet of min. 250 x 250 x 1 mm

| Symbol | Conditions | Values | Units |
|---|---|---|---|
| $I_D$ | $T_c$ = 127 °C | 50 | A |
| | $T_a$ = 45 °C; isolated [2] | 7 | A |
| | $T_a$ = 45 °C; chassis [3] | 18 | A |
| | $T_a$ = 45 °C; R4A/120 | 27 | A |
| | $T_a$ = 45 °C; P5A/100 | 31 | A |
| $I_{FSM}$ | $T_{vj}$ = 25 °C; 10 ms | 775 | A |
| | $T_{vj}$ = 150 °C; 10 ms | 700 | A |
| $i^2t$ | $T_{vj}$ = 25 °C; 8,3 ... 10 ms | 3000 | $A^2s$ |
| | $T_{vj}$ = 150 °C; 8,3 ... 10 ms | 2450 | $A^2s$ |
| $V_F$ | $T_{vj}$ = 25 °C; $I_F$ = 75 A | max. 1,45 | V |
| $V_{(TO)}$ | $T_{vj}$ = 150 °C | max. 0,8 | V |
| $r_T$ | $T_{vj}$ = 150 °C | max. 8,5 | mΩ |
| $I_{RD}$ | $T_{vj}$ = 25 °C; $V_{DD}$ = $V_{DRM}$; $V_{RD}$ = $V_{RRM}$ | max. 0,2 | mA |
| | $T_{vj}$ = 150 °C; $V_{RD}$ = $V_{RRM}$ | 4 | mA |
| $t_{rr}$ | $T_{vj}$ = 25 °C; $I_F$ = $I_R$ = 1A | 5 | µs |
| $R_{th(j-c)}$ | per diode | 1,1 | K/W |
| | total | 0,183 | K/W |
| $R_{th(c-s)}$ | total | 0,1 | K/W |
| $R_{th(j-a)}$ | isolated [2] (chassis [3]) | 9 (3,15) | K/W |
| $T_{vj}$ | | - 40 ... +150 | °C |
| $T_{stg}$ | | - 40 ... +125 | °C |
| $V_{isol}$ | a. c. 50 Hz; r.m.s.; 1 s / 1 min. | 3600 ( 3000 ) | V |
| $M_s$ | to heatsink | 4,5 ± 15 % | Nm |
| $M_t$ | | | |
| m | | 97 | g |
| Case | | G 51 | |

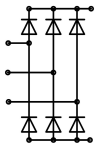

SKD

 © by SEMIKRON

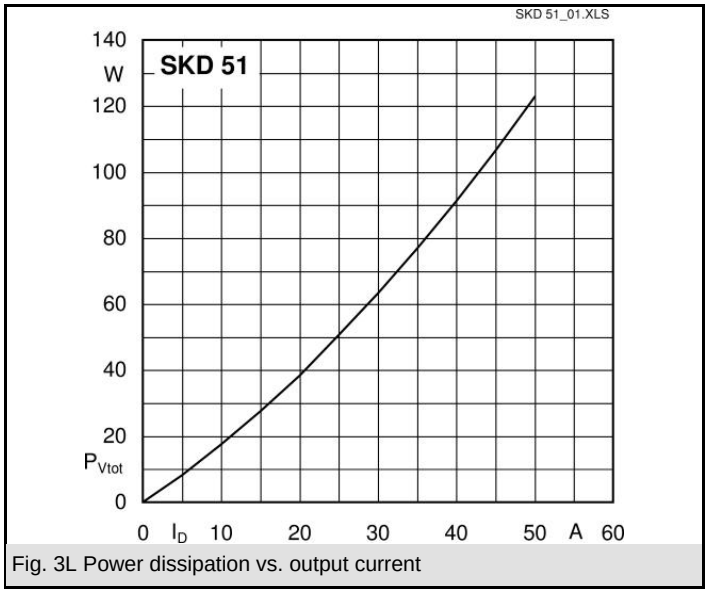


Fig. 3L Power dissipation vs. output current

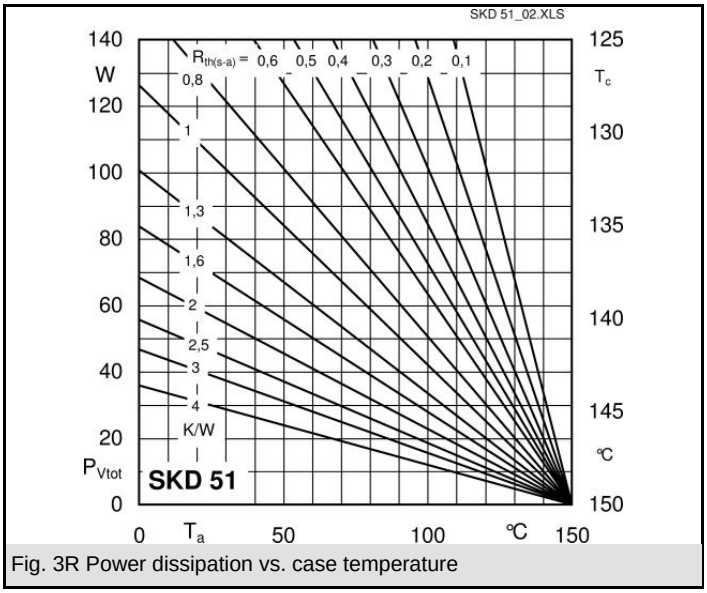


Fig. 3R Power dissipation vs. case temperature

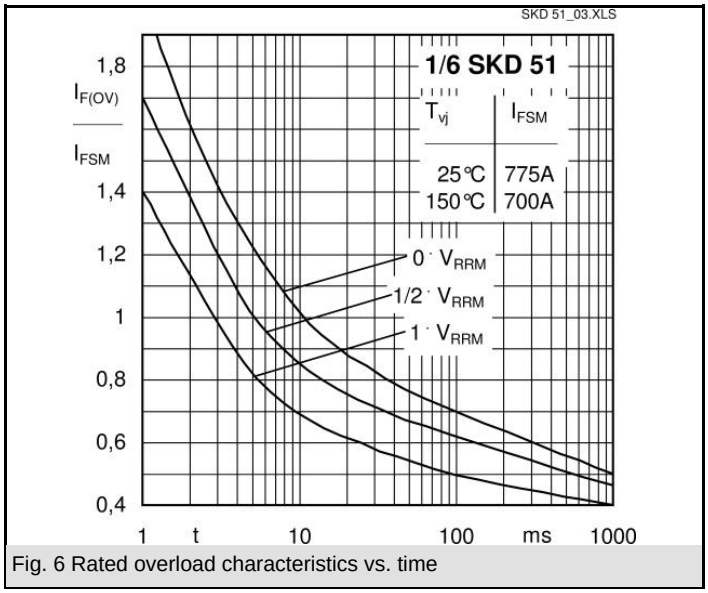


Fig. 6 Rated overload characteristics vs. time

 © by SEMIKRON

# SKD 51

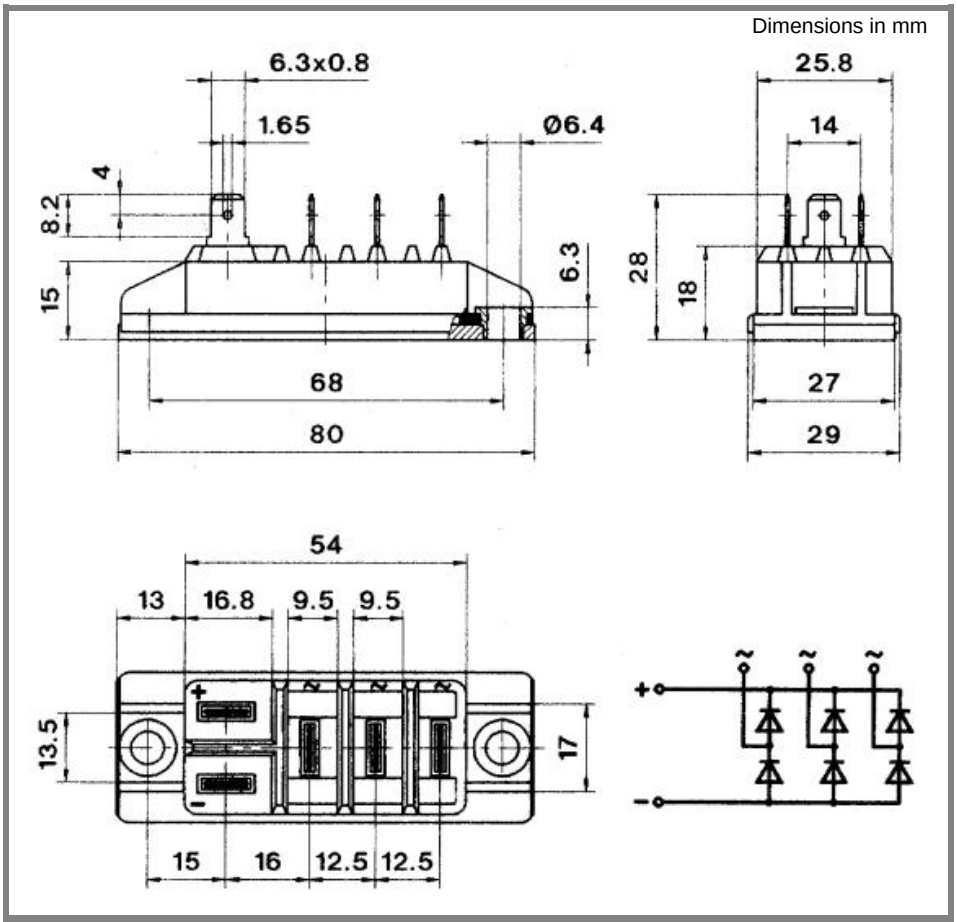


Case G 51

* The specifications of our components may not be considered as an assurance of component characteristics. Components have to be tested for the respective application. Adjustments may be necessary. The use of SEMIKRON products in life support appliances and systems is subject to prior specification and written approval by SEMIKRON. We therefore strongly recommend prior consultation of our personal.

 © by SEMIKRON